PRODUCT CATALOG

Franklin Electric

SUBMERSIBLE DRAINAGE PUMPS

FDX, FDP SERIES



franklinwater.eu

MENU

Franklin Electric

INDEX

SUBMERSIBLE PUMPS FOR RESIDENTIAL DRAINAGE 50 HZ

FDX Series Submersible Drainage pumps 4
Product identification code 5
General features 5
40FDX-52 6
50FDX-52 10

SUBMERSIBILE PUMPS FOR PROFESSIONAL DRAINAGE 50 HZ

40-50FDP Series - Submersible drainage pumps 16
Product identification code 17
General features 17
40FDP-52 18
50FDP-52 18
40FDP-52-HH 20

70-80FDP Series - Submersible drainage pumps 24
Product identification code 25
General features 25
70FDP-52 26
80FDP-52 26

100-150FDP Series - Submersible drainage pumps 29
General features 30
Product identification code 30
100FDP-52-5,5/ 100FDP-52-8,1 31
100FDP-52-11 / 100FDP-52-15 34
150FDP-52-11 / 150FDP-52-15 34

150FDP Series - Submersible drainage pumps 37
Product identification code 38
General features 38
150FDP-52-22 39

Accessories 42

Construction versions 42

Franklin Electric reserves the right to amend specification without prior notice.
For the most up-to-date product information, visit franklinwater.eu.

Franklin Electric

Get more product information through media contents!

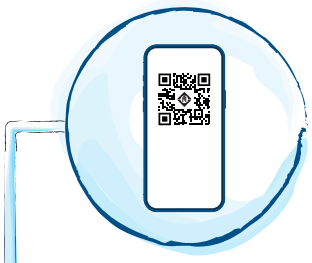

STAY UP TO DATE WITH THE ONLINE VERSION

You will be redirected to the page of our website where you can find:

- Product page
- Catalogs & manuals
- Declarations & certifications
- Technical documentation



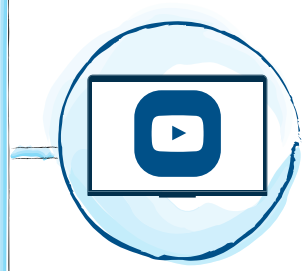

WATCH THE YOUTUBE VIDEOS

You will be redirected to our Youtube page where you can find:

- Product overview
- Installation tutorials
- Service & maintenance
- Technical training





SELECT YOUR PUMP NOW

You will be redirected to our Pump selector software:

- Product selection
- Datasheet

Everything you need is your smartphone!



NEW CUSTOMER REGISTRATION

You are not yet our customer, but want to buy our products?

1) Contact the area manager

2) Fill in the customer registration form

By scanning the qr code or clicking on the image to access the link!

Submersible pumps for residential drainage 50 Hz

FDX Series



FDX Series Submersible Drainage pumps

RESIDENTIAL COMMERCIAL

- Pump models:
  - 40FDX-52 (discharge Ø 40 mm - G1" ½)
  - 50FDX-52 (discharge Ø 50 mm - G2")
- Open impeller
- Available with or without adjustable float switch
- Double mechanical seal in oil chamber (pump side SiC/SiC)
- Dry chamber motor
- Cast iron components with cataphoresis coating for increased corrosion resistance
- Quick connectors for easy maintenance
- Control box with thermal protection required for three-phase motors
- Single-phase versions up to 1.1 kW with built-in thermal protector and internal capacitor
- Stainless steel handle

Technical data

- Flow:up to 36 m^3/h
- Total Head: up to 17.2 m
- Motor power: 0.4 - 1.1 kW
- Minimum immersion depth:
  - 280 mm (40 FDX)
  - 336 mm (50FDX)
- Maximum immersion depth: 5 m
- Free passage:
  - 7 mm (40 FDX)
  - 6 mm (50FDX)

ACCESSORIES

- Hose connection elbow
- For more information about accessories see p. 42

Stainless Steel motor



Cable length 10 m
(single-phase pumps with plug)

Quick connectors
for an easy maintenance

Dry chamber motor
for fast and easy maintenance

Double mechanical seal
(pump side SiC/SiC)

Cast iron components with cataphoresis coating
for enhanced corrosion resistance

Suction strainer



Open impeller

Pumping of clear non-loaded fluids

Extraction of water from ponds, streams or pits and for rainwater collection

Wastewater

Draining clear and turbid water

Franklin Electric

FDX Series Submersible Drainage pumps

PRODUCT IDENTIFICATION CODE

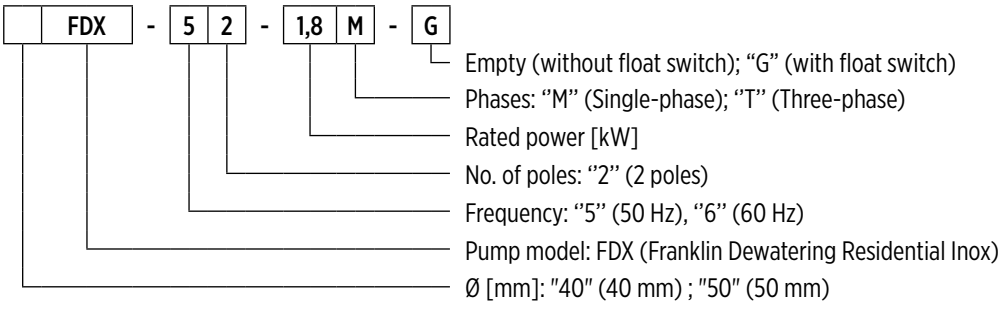

00140089 04/2023

GENERAL FEATURES

Materials/Constr.design		
Impeller		Cast iron EN GJL200
External casing		Stainless steel AISI304
Pump body		Cast iron EN GJL200 with cataphoresis coating
Cover		Cast iron EN GJL200 with cataphoresis coating
Filter	**40FDX**	Aluminium alloy
	50FDX	Stainless steel AISI304
Mechanical seal	**motor side**	Graphite/Ceramic
	pump side	Silicon carbide (SiC/SiC)
Motor shaft		Stainless steel AISI416
Power cable	**Type**	10 m H07RN8-F
	Single-phase	3G1mm² with SCHUKO plug (CEE 7/VII)
	Three-phase	4G1mm²
Motor		
Constr.design		asynchronous squirrel cage-type in dry chamber
Type		2 poles; 50 Hz
Insulation class		F
Protection degree		IP68
Voltage	**Single-phase**	230 V ±6% built-in overheating protection, built in capacitor
	Three-phase	230V ±10%, 400V ±10%
Operating limits		
Maximum liquid temperature		+40 °C
pH of pumped liquid		6- 10
Liquid density		1,0 kg/dm³
Maximum immersion depth		5 m
Min. immersion depth for continuous service	**40FDX**	280 mm
	50FDX	336 mm
Free passage	**40FDX**	7 mm
	50FDX	6 mm
Max. number of starting/hour		20
Construction options		

- 60 Hz version
- Different voltages
- Food-grade white oil

40FDX-52

HYDRAULIC PERFORMANCE 50 HZ

Pump model	Q = Delivery											
	l/sec 0	0,5	1,0	1,5	2,0	2,5	3,0	3,5	4,0	4,5	5,0	5,5
	m^3/h 0	1,8	3,6	5,4	7,2	9,0	10,8	12,6	14,4	16,2	18,0	19,8
	US gpm 0	7,9	15,8	23,7	31,7	39,6	47,5	55,5	63,4	71,3	79,2	87,2
	H = Total meters head of water column [m]											
40FDX-52-0,4	8,2	**8,0**	**7,7**	**7,2**	**6,7**	**6,0**	**5,1**	**4,3**	**3,3**	**2,1**		
40FDX-52-0,6	9,4	**9,1**	**8,7**	**8,3**	**7,7**	**7,0**	**6,1**	**5,2**	**4,0**	**2,9**	**1,7**	
40FDX-52-0,7	11,3	**11,1**	**10,9**	**10,5**	**9,9**	**9,2**	**8,5**	**7,6**	**6,6**	**5,4**	**4,1**	**2,1**

Application range

TECHNICAL DATA

Pump model	Motor absorbed power P_1	Rated power P_2		Voltage	Rated current	Phases	Power cable		Float switch	Starting capacitor	Discharge port	Weight [kg]
	[kW]	[kW]	[HP]	[V]	[A]		Length [m]	Type		[µf]		
40FDX-52-0,4M	0,63	0,4	0,5	230	3,1	1 ~	10	3G1	-	10	G1½	14,5
40FDX-52-0,4M-G	0,63	0,4	0,5	230	3,1	1 ~	10	3G1	•	10	G1½	14,5
40FDX-52-0,6M	0,67	0,6	0,8	230	3,2	1 ~	10	3G1	-	10	G1½	14,5
40FDX-52-0,6M-G	0,67	0,6	0,8	230	3,2	1 ~	10	3G1	•	10	G1½	14,5
40FDX-52-0,7M	0,85	0,7	0,95	230	4,0	1 ~	10	3G1	-	16	G1½	16,5
40FDX-52-0,7M-G	0,85	0,7	0,95	230	4,0	1 ~	10	3G1	•	16	G1½	16,5
40FDX-52-0,7T	0,85	0,7	0,95	400	1,6	3 ~	10	4G1	-	-	G1½	16,5
40FDX-52-0,7T-G	0,85	0,7	0,95	400	1,6	3 ~	10	4G1	•	-	G1½	16,5

"-" = not available
• = available

40FDX-52

PERFORMANCE CURVES AT 50 HZ

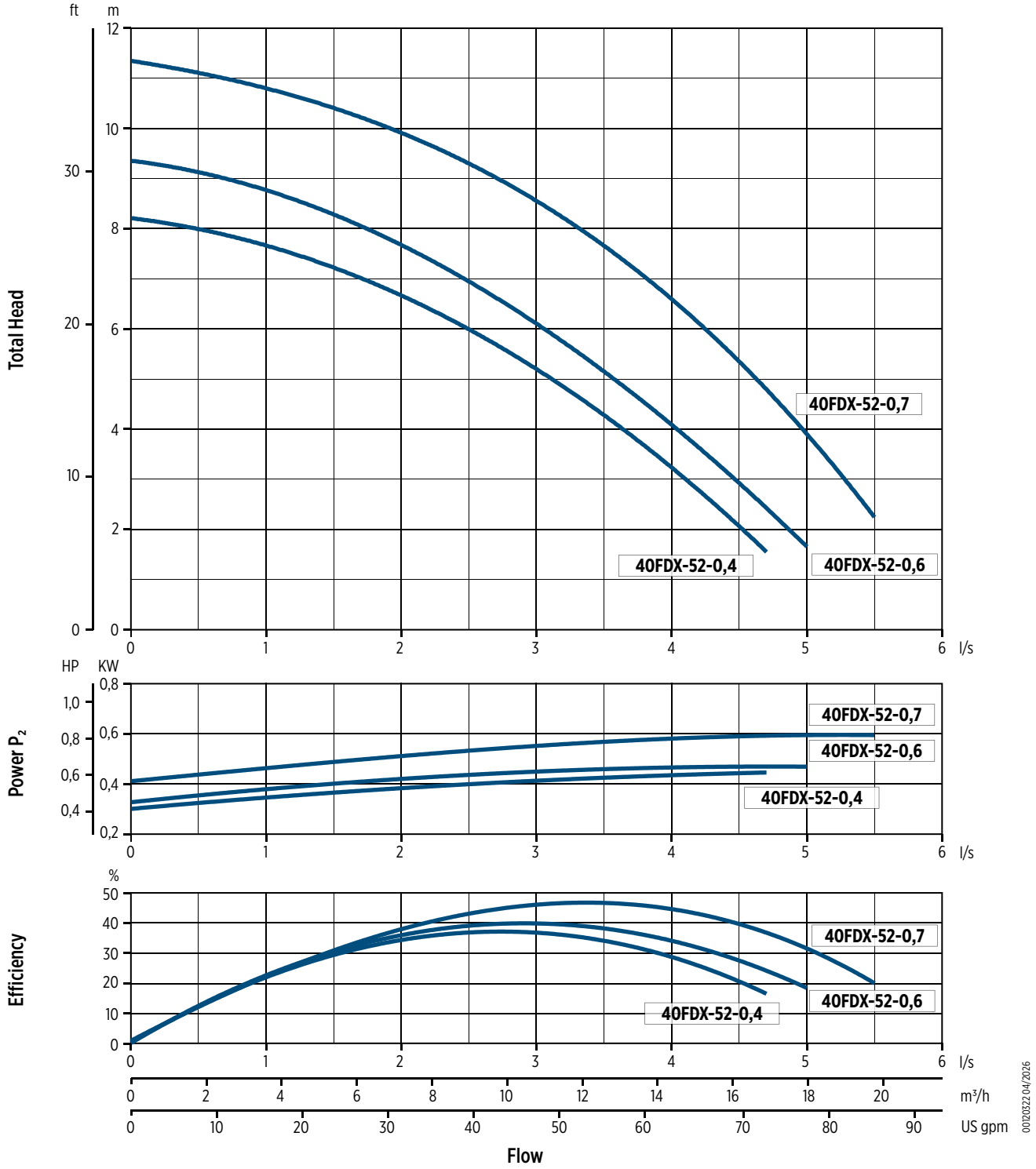

0012032 04/2026

40FDX-52

DIMENSIONS

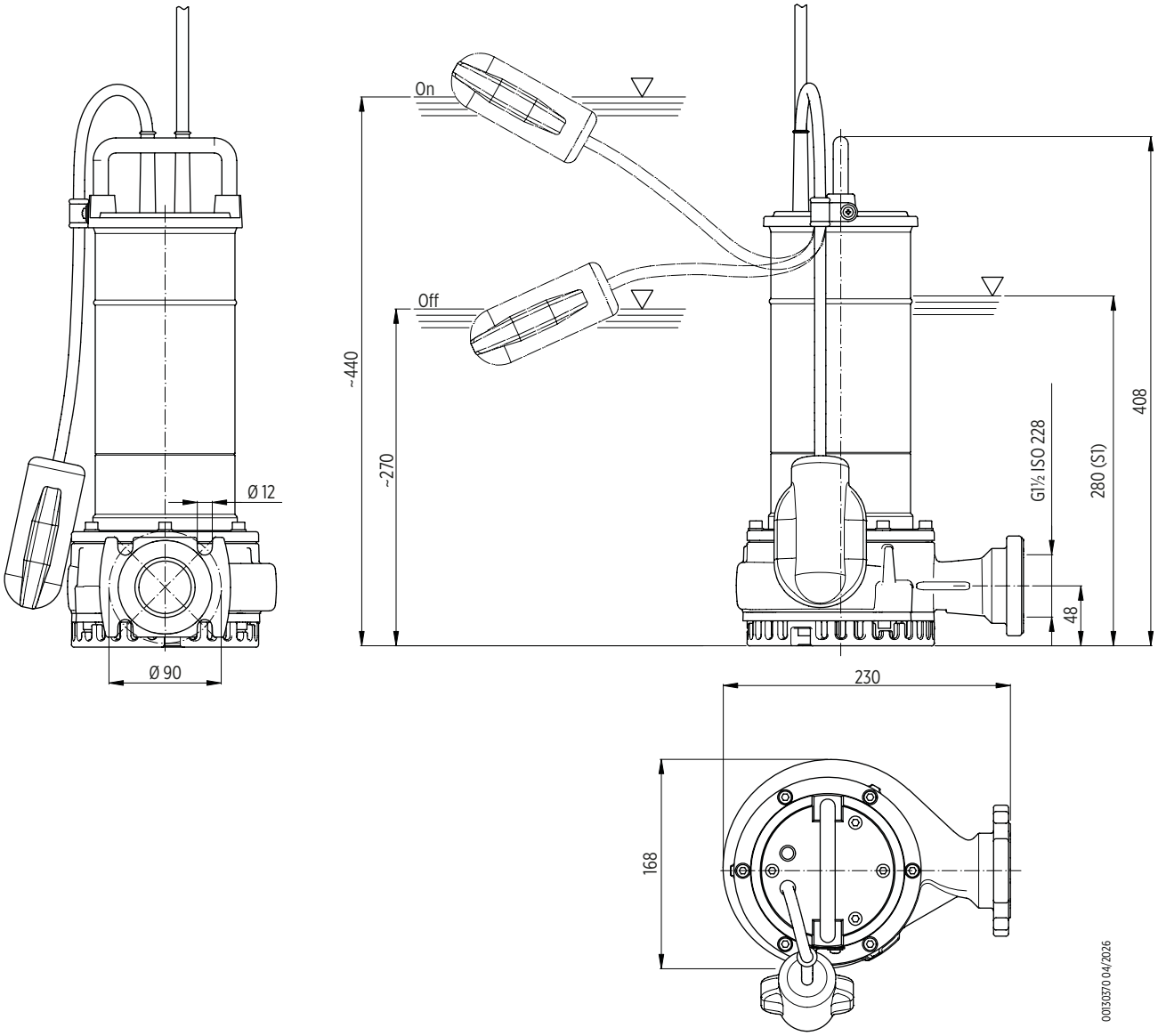

Package		
Pump model	Dimensions [mm]	Weight [kg]
40FDX-52-0,4	255x225x560	15,2
40FDX-52-0,6		
40FDX-52-0,7		17,2

Pallet			
Pump model	Dimensions [mm]	N° of pumps	Weight [kg]
40FDX-52-0,4	1200x800x700	15	245
40FDX-52-0,6			
40FDX-52-0,7			275

40FDX-52

INSTALLATION

Transportable installation

Transportable as emergency pump with connection to the hose and for free installation in the well.

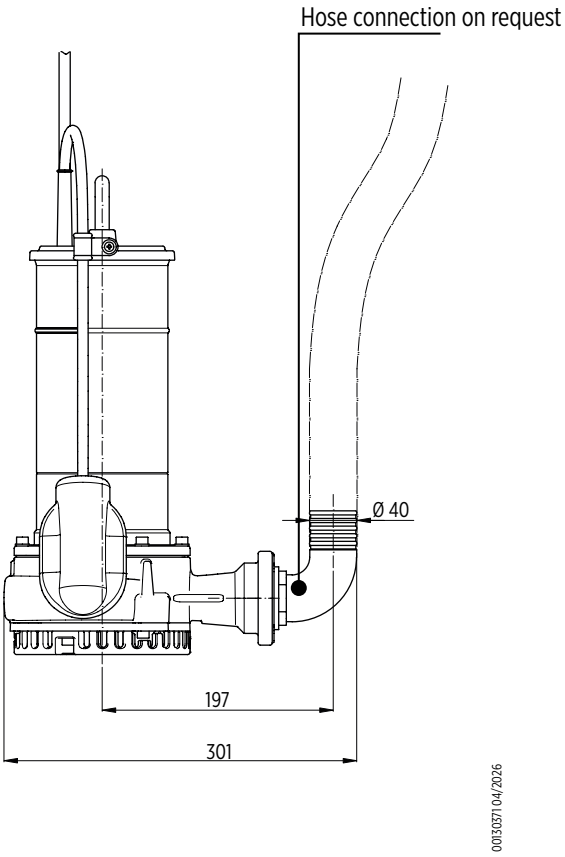

50FDX-52

HYDRAULIC PERFORMANCE 50 HZ

Pump model	Q = Delivery														
	l/sec 0	1,0	1,5	2,0	2,5	3,0	3,5	4,0	4,5	5,0	6,0	7,0	8,0	9,0	10,0
	m^3/h 0	3,6	5,4	7,2	9,0	10,8	12,6	14,4	16,2	18,0	21,6	25,2	28,8	32,4	36,0
	US gpm 0	15,8	23,7	31,7	39,6	47,5	55,5	63,4	71,3	79,2	92,1	110,9	126,8	142,6	158,5
	H = Total meters head of water column [m]														
50FDX-52-0,9	14,9	**14,4**	**14,1**	**13,8**	**13,3**	**12,9**	**12,5**	**11,8**	**11,4**	**10,6**	**9,1**	**7,4**	**5,5**	**3,4**	
50FDX-52-1,1	17,2	**16,4**	**16,0**	**15,6**	**15,2**	**14,6**	**14,3**	**13,6**	**13,1**	**12,3**	**10,9**	**9,3**	**7,3**	**5,5**	**3,2**

Application range

TECHNICAL DATA

Pump model	Motor absorbed power P_1	Rated power P_2		Voltage	Rated current	Phases	Power cable		Float switch	Starting capacitor	Discharge port	Weight [kg]
	[kW]	[kW]	[HP]	[V]	[A]		Length [m]	Type		[µf]		
50FDX-52-0,9M	1,4	0,9	1,2	230	6,1	1 ~	10	3G1	-	20	G2	18
50FDX-52-0,9M-G	1,4	0,9	1,2	230	6,1	1 ~	10	3G1	•	20	G2	18
50FDX-52-0,9T	1,4	0,9	1,2	400	2,1	3 ~	10	4G1	-	-	G2	18
50FDX-52-0,9T-G	1,4	0,9	1,2	400	2,1	3 ~	10	4G1	•	-	G2	18
50FDX-52-1,1M	1,5	1,1	1,9	230	7,3	1 ~	10	3G1	-	25	G2	19,5
50FDX-52-1,1M-G	1,5	1,1	1,9	230	7,3	1 ~	10	3G1	•	25	G2	19,5
50FDX-52-1,1T	1,5	1,1	1,9	400	3,2	3 ~	10	4G1	-	-	G2	19,5

"-" = not available
• = available

50FDX-52

PERFORMANCE CURVES AT 50 HZ

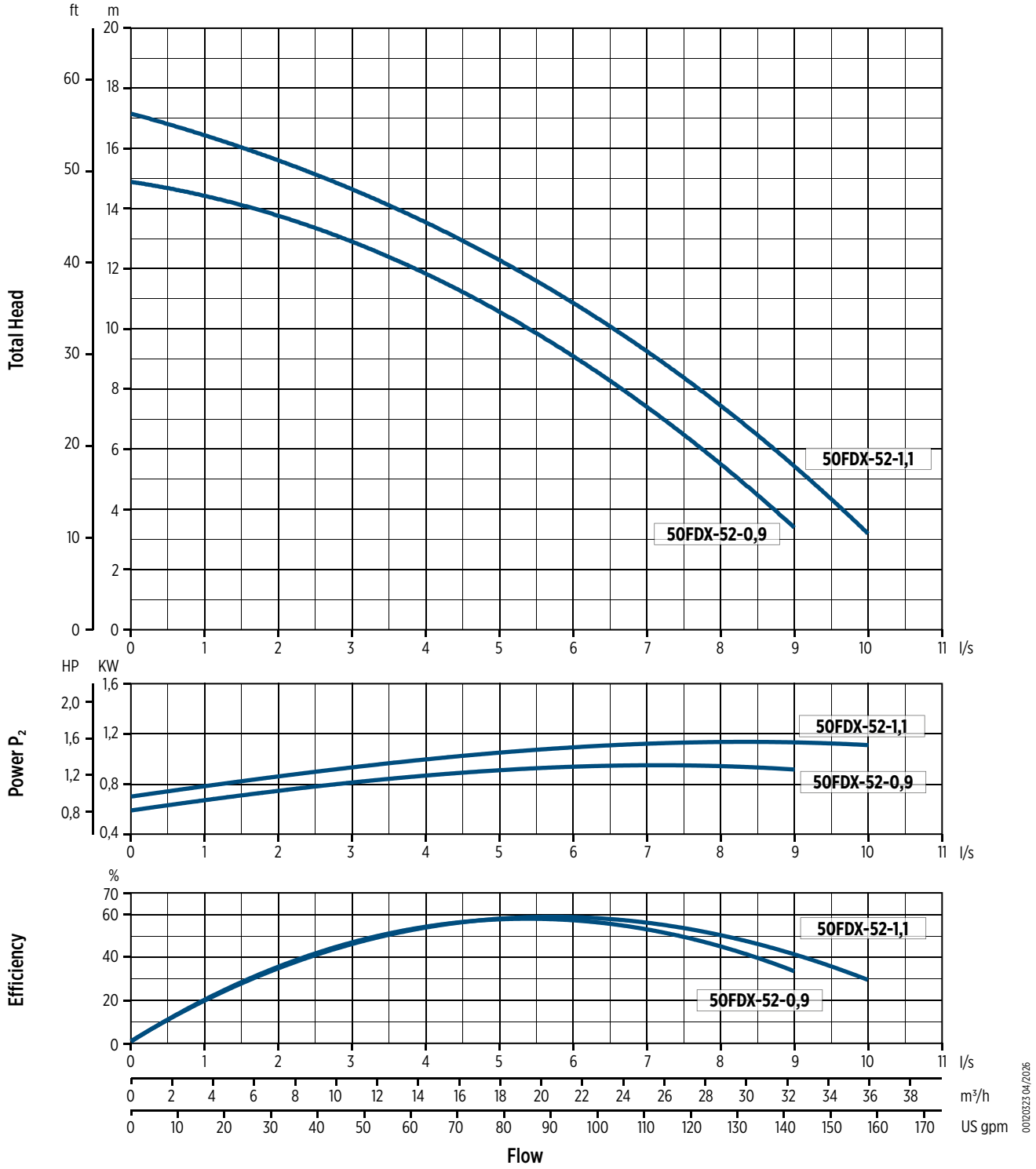

00120323 04/2026

50FDX-52

DIMENSIONS

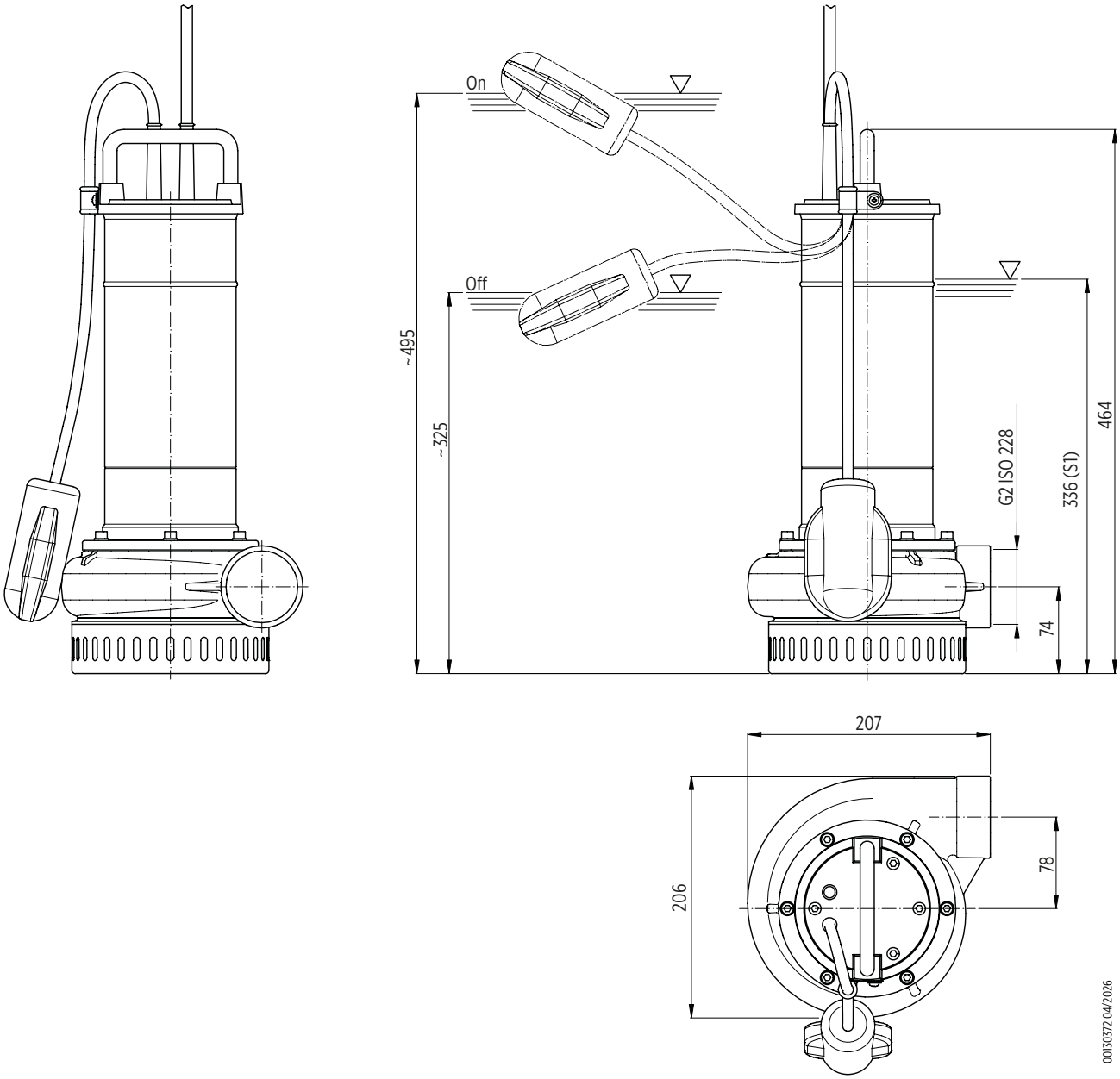

Package		
Pump model	Dimensions [mm]	Weight [kg]
50FDX-52-0,9	255x205x560	18,7
50FDX-52-1,1		20,2

Pallet			
Pump model	Dimensions [mm]	N° of pumps	Weight [kg]
50FDX-52-0,9	1200x800x700	15	300
50FDX-52-1,1			320

50FDX-52

INSTALLATION

Transportable installation

Transportable as emergency pump with connection to the hose and for free installation in the well.

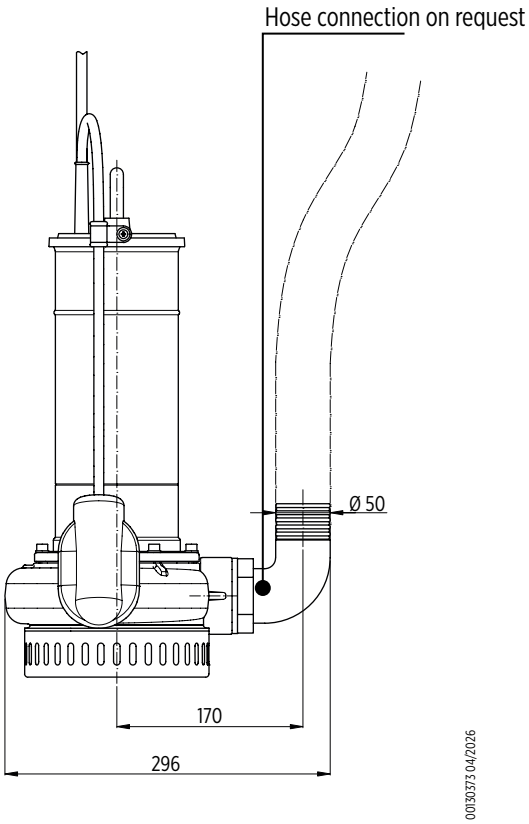

Submersibile pumps for professional drainage 50 Hz

FDP Series



40-50FDP Series - Submersible drainage pumps

- Pump models:
  - 40FDP-52 (discharge G1"½)
  - 50FDP-52 (discharge G2")
- Impeller type: open (standard version) or double-open impeller (HH version)
- Available with or without float switch
- Mechanical seal: SiC/SiC (silicon carbide)
- Main components in aluminum to reduce weight; impeller in cast iron for durability
- HH version provides higher head
- Single-phase version up to 1.1 kW with built-in thermal protector
- External capacitor
- Wide range of available accessories

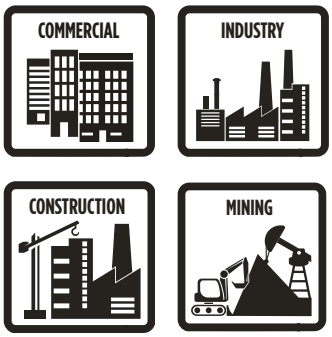

Alluminium components

Higher head version (HH)

Technical data

- Flow: up to 54 m^3/h
- Total Head: up to 32 m
- Motor power: 1 - 2.2 kW
- Minimum immersion depth: see "Dimensions" tables
- Maximum immersion depth: 5 m
- Free passage: 6 mm

ACCESSORIES

- Storz coupling
- For more information about accessories see p. 42

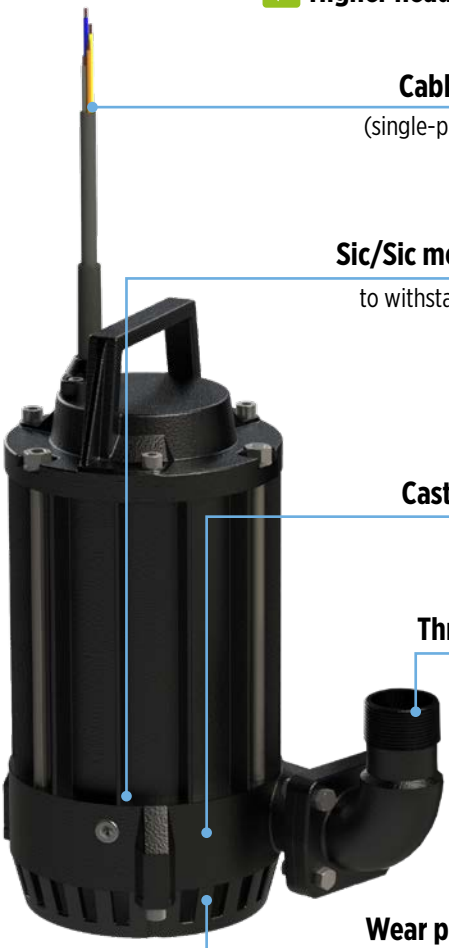

Cable lenght 10 m
(single-phase pumps with plug)

Sic/Sic mechanical seal
to withstand abrasive fluid

Cast iron impeller
to resist

Threaded elbow
included in the package

Wear plate with NBR rubber coating
(50FDP)



Open impeller



Double open impeller
"HH" (high head version)


Drainage and dewatering


Rainwater recovery


Draining clear and turbid water


Construction site drainage and dewatering


Mining, quarrying drainage and dewatering

40-50FDP Series - Submersible drainage pumps

PRODUCT IDENTIFICATION CODE

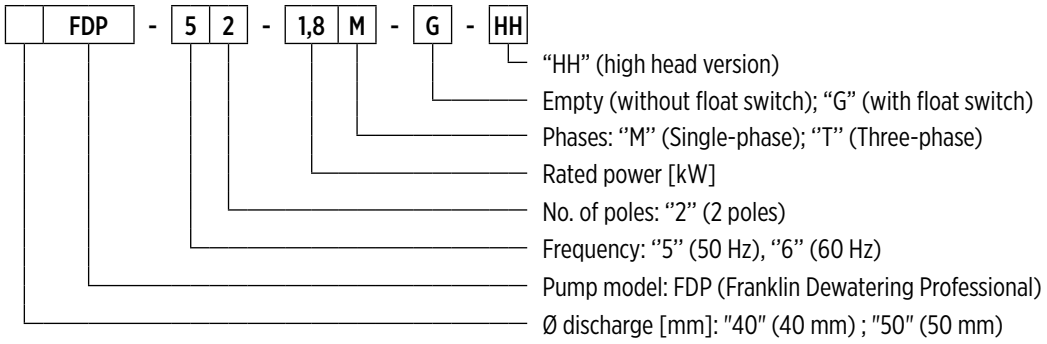

001400089 04/2026

GENERAL FEATURES

Materials/Constr.design		
Impeller		Cast iron EN GJL200
External casing		Aluminium alloy EN AW6060
Pump body		Aluminium alloy
Cover		Aluminium alloy
Filter		Aluminium alloy
Wear plate	**40FDP-52-1,0M**	Stainless steel AISI304
	50FDP-52-1,4M, 50FDP-52-1,8M	Aluminium alloy with NBR rubber coating
Mechanical seal		Silicon carbide (SiC/SiC)
Motor shaft		Stainless steel AISI420
Power cable	**Type**	10 m H07RN-F
	Single-phase 40FDP-52-1,0M	4G1,5mm², capacitor box and SCHUKO plug (CEE 7/VII)
	Single-phase 50FDP-52-1,4M, 50FDP-52-1,8M	4G2,5mm², capacitor box and SCHUKO plug (CEE 7/VII)
	Three-phase	4G1,5mm²
Motor		
Constr.design		asynchronous squirrel cage-type oil filled
Type		2 poles; 50 Hz
Insulation class		F
Protection degree		IP68
Voltage	**Single-phase**	230V ±6% built-in overheating protection (up to 1,1 kW)
	Three-phase	230V ±10%, 400V ±10%
Operating limits		
Maximum liquid temperature		+40 °C
pH of pumped liquid		5 - 8
Liquid density		1,0 kg/dm³
Maximum immersion depth		5 m
Min. immersion depth for continuous service		see "Dimensions" tables
Free passage		6 mm
Max. number of starting/hour		20
Construction options		

- 60 Hz version
- Different voltages
- Food-grade white oil

40FDP-52

HYDRAULIC PERFORMANCE 50 HZ

Pump model	Q = Delivery							
	l/sec 0	1	2	3	4	5	6	7
	m³/h 0	3,6	7,2	10,8	14,4	18	21,6	25,2
	US gpm 0	15,8	31,7	47,5	63,4	79,2	92,1	110,9
	H = Total meters head of water column [m]							
40FDP-52-1,0	18	**16,5**	**15**	**13,5**	**11**	**8**	**4,5**	**1**
40FDP-52-1,1	20	**18,5**	**17**	**15,5**	**13,5**	**11**	**8,5**	**5**

Application range

TECHNICAL DATA

Pump model	Motor absorbed power P_1	Rated power P_2		Voltage	Rated current	Phases	Power cable		Float switch	Starting capacitor	Discharge port	Weight [kg]
	[kW]	[kW]	[HP]	[V]	[A]		Length [m]	Type		[µf]		
40FDP-52-1,0M	1,4	1	1,36	230	7,2	1 ~	10	4G1,5	-	25	G1½	20
40FDP-52-1,0M-G	1,4	1	1,36	230	7,2	1 ~	10	4G1,5	•	25	G1½	20
40FDP-52-1,0T	1,4	1	1,36	400	2	3 ~	10	4G1,5	-	-	G1½	20
40FDP-52-1,0T-G	1,4	1	1,36	400	2	3 ~	10	4G1,5	•	-	G1½	20
40FDP-52-1,1T	1,7	1,1	1,5	400	3	3 ~	10	4G1,5	-	-	G1½	20
40FDP-52-1,1T-G	1,7	1,1	1,5	400	3	3 ~	10	4G1,5	•	-	G1½	22

"-" = not available
• = available

50FDP-52

HYDRAULIC PERFORMANCE 50 HZ

Pump model	Q = Delivery															
	l/sec 0	1	2	3	4	5	6	7	8	9	10	11	12	13	14	15
	m³/h 0	3,6	7,2	10,8	14,4	18	21,6	25,2	28,8	32,4	36	39,6	43,2	46,8	50,4	54
	US gpm 0	15,8	31,7	47,5	63,4	79,2	92,1	110,9	126,8	142,6	158,5	174,3	190,2	206	221,9	237,7
	H = Total meters head of water column [m]															
50FDP-52-1,4	14,3	**14,1**	**13,7**	**13,1**	**12,5**	**11,8**	**11**	**9,8**	**8,5**	**7**	**6**	**4,5**	**2,8**			
50FDP-52-1,8	16,6	**16,3**	**16,1**	**15,8**	**15,1**	**14,2**	**14**	**12,8**	**11,8**	**10,2**	**9**	**7**	**5,8**	**4**	**2**	
50FDP-52-2,2	18,5	**18,5**	**18,2**	**17,8**	**17,5**	**16,5**	**16**	**14,7**	**13,9**	**12**	**10,5**	**9,1**	**7,5**	**5,8**	**4**	**2**

Application range

TECHNICAL DATA

Pump model	Motor absorbed power P_1	Rated power P_2		Voltage	Rated current	Phases	Power cable		Float switch	Starting capacitor	Discharge port	Weight [kg]
	[kW]	[kW]	[HP]	[V]	[A]		Length [m]	Type		[µf]		
50FDP-52-1,4M	2,1	1,4	1,9	230	12	1 ~	10	4G2,5	-	25	G2	23
50FDP-52-1,4M-G	2,1	1,4	1,9	230	12	1 ~	10	4G2,5	•	25	G2	25
50FDP-52-1,8M	2,4	1,8	2,4	230	14	1 ~	10	4G2,5	-	30	G2	27
50FDP-52-1,8M-G	2,4	1,8	2,4	230	14	1 ~	10	4G2,5	•	30	G2	29
50FDP-52-1,8T	2,4	1,8	2,4	400	4,6	3 ~	10	4G1,5	-	-	G2	25
50FDP-52-1,8T-G	2,4	1,8	2,4	400	4,6	3 ~	10	4G1,5	•	-	G2	27
50FDP-52-2,2T	2,9	2,2	3	400	5	3 ~	10	4G1,5	-	-	G2	26
50FDP-52-2,2T-G	2,9	2,2	3	400	5	3 ~	10	4G1,5	•	-	G2	28

"-" = not available
• = available

40FDP-52 / 50FDP-52

PERFORMANCE CURVES AT 50 HZ

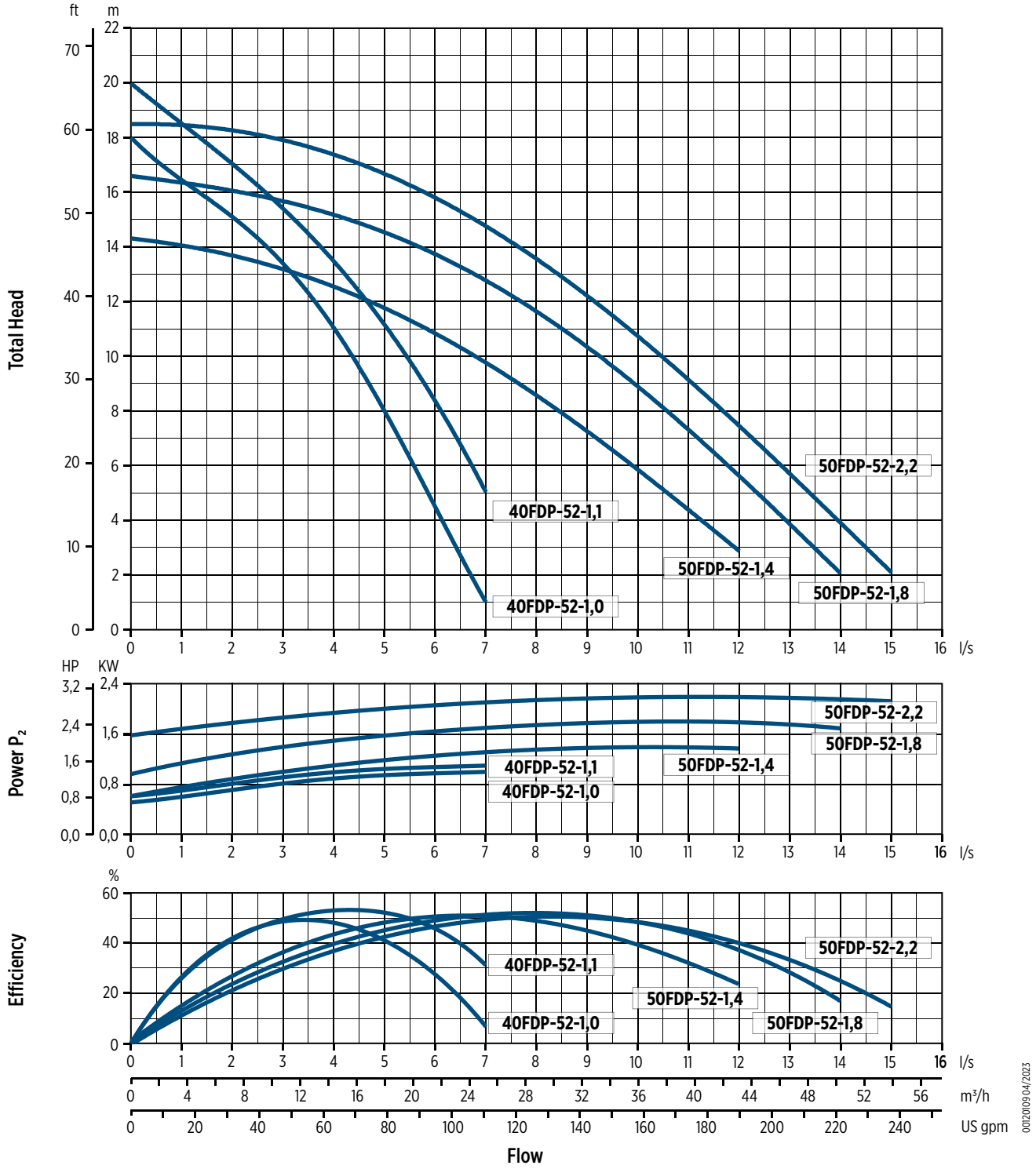

40FDP-52-HH

HYDRAULIC PERFORMANCE 50 HZ

Pump model	Q = Delivery							
	l/sec 0	1	2	3	4	5	6	7
	m^3/h 0	3,6	7,2	10,8	14,4	18	21,6	25,2
	US gpm 0	15,8	31,7	47,5	63,4	79,2	92,1	110,9
	H = Total meters head of water column [m]							
40FDP-52-1,4 HH	31	**27**	**23**	**19**	**14,5**	**10**	**5,2**	
40FDP-52-1,8 HH	32	**29,5**	**26**	**22**	**18**	**13**	**7,8**	**2**

Application range

TECHNICAL DATA

Pump model	Motor absorbed power P_1	Rated power P_2		Voltage	Rated current	Phases	Power cable		Float switch	Starting capacitor	Discharge port	Weight [kg]
	[kW]	[kW]	[HP]	[V]	[A]		Length [m]	Type		[µf]		
40FDP-52-1,4M-HH	2,2	1,4	1,9	230	12	1 ~	10	4G2,5	-	25	G1½	22
40FDP-52-1,4M-G-HH	2,2	1,4	1,9	230	12	1 ~	10	4G2,5	•	25	G1½	24
40FDP-52-1,8M-HH	2,7	1,8	2,4	230	14	1 ~	10	4G2,5	-	30	G1½	25
40FDP-52-1,8M-G-HH	2,7	1,8	2,4	230	14	1 ~	10	4G2,5	•	30	G1½	27
40FDP-52-1,8T-HH	2,4	1,8	2,4	400	4,6	3 ~	10	4G1,5	-	-	G1½	22
40FDP-52-1,8T-G-HH	2,4	1,8	2,4	400	4,6	3 ~	10	4G1,5	•	-	G1½	24

"-" = not available
• = available

40FDP-52-HH

PERFORMANCE CURVES AT 50 HZ

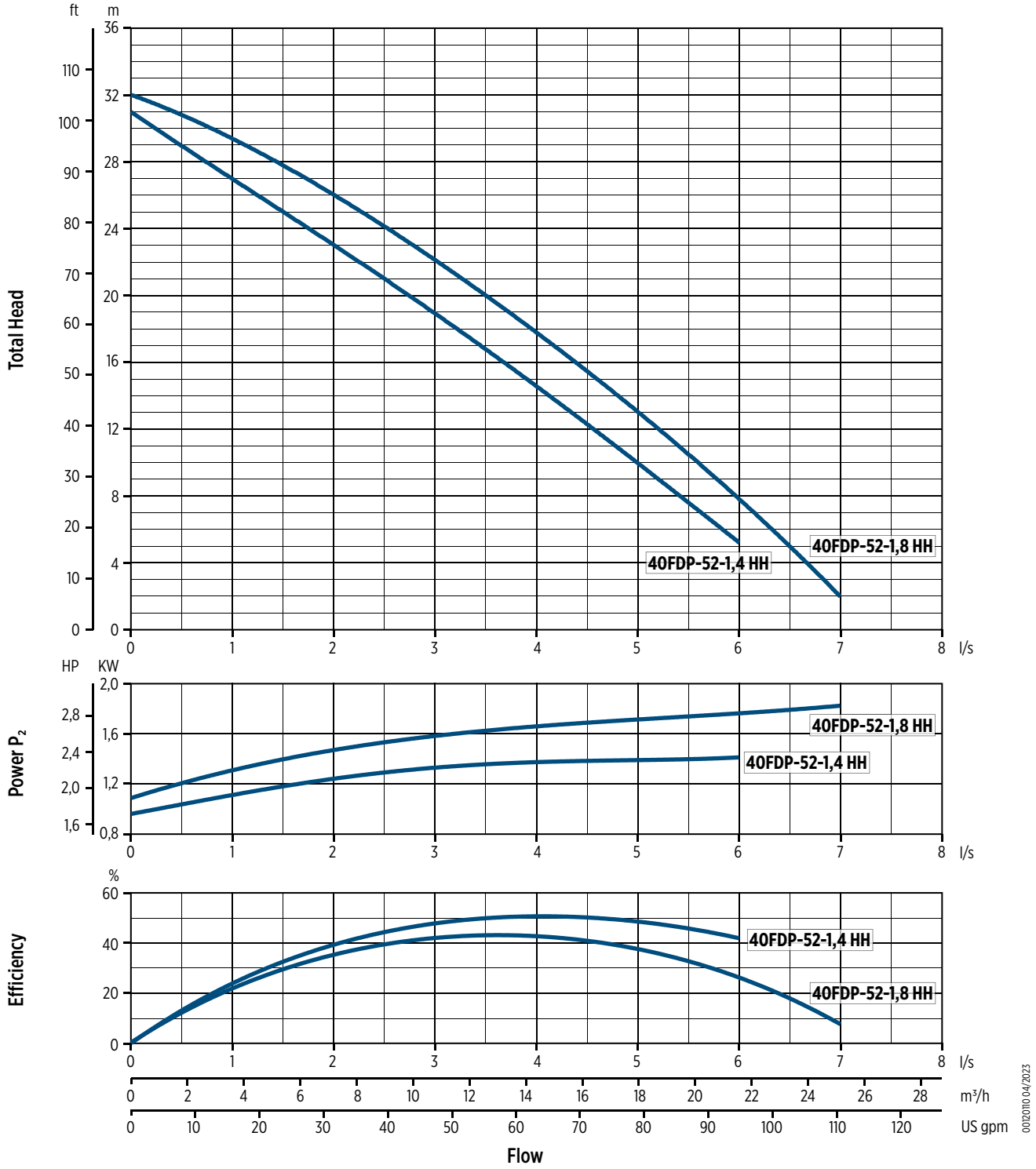

40FDP-52 / 50FDP-52

DIMENSIONS

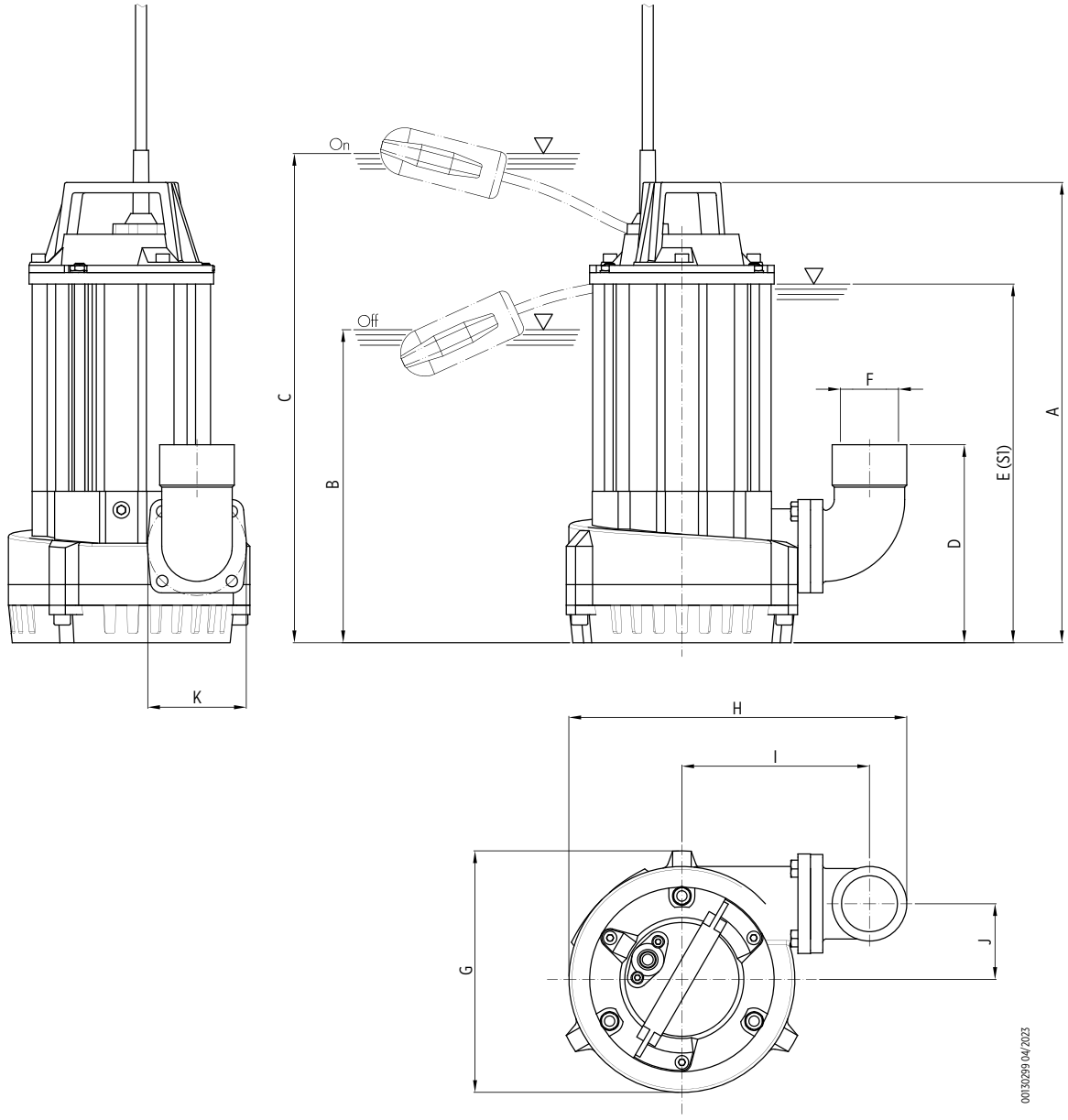

Pump model	Dimensions [mm]										
	A	B	C	D	E	F	G	H	I	J	K
40FDP-52-1,0M	390	-	-	162	290	G1½ M	190	290	175	60	75
40FDP-52-1,0M-G	390	230	440	162	290	G1½ M	190	290	175	90	75
40FDP-52-1,0T	390	-	-	162	290	G1½ M	190	290	175	60	75
40FDP-52-1,0T-G	390	-	-	162	290	G1½ M	190	290	175	60	75
40FDP-52-1,1T	390	-	-	162	290	G1½ M	190	290	175	60	75
40FDP-52-1,1T-G	390	-	-	162	290	G1½ M	190	290	175	60	75
50FDP-52-1,4M	445	-	-	190	345	G2 F	233	326	180	73	95
50FDP-52-1,4M-G	485	240	530	190	345	G2 F	233	326	180	73	95
50FDP-52-1,8M	445	-	-	190	345	G2 F	233	326	180	73	95
50FDP-52-1,8M-G	485	240	530	190	345	G2 F	233	326	180	73	95
50FDP-52-1,8T	445	-	-	190	345	G2 F	233	326	180	73	95
50FDP-52-1,8T-G	485	240	530	190	345	G2 F	233	326	180	73	95
50FDP-52-2,2T	445	-	-	190	345	G2 F	233	326	180	73	95
50FDP-52-2,2T-G	485	240	530	190	345	G2 F	233	326	180	73	95

Package		
Pump model	Dimensions [mm]	Weight [kg]
40FDP-52-1,0M	255x205x560	20,7
40FDP-52-1,0M-G	290x245x585	21
40FDP-52-1,0T	255x205x560	20,7
40FDP-52-1,0T-G	255x205x560	20,7
40FDP-52-1,1T	255x205x560	20,7
40FDP-52-1,1T-G	255x205x560	22,7
50FDP-52-1,4M	300x260x585	24
50FDP-52-1,4M-G	300x260x585	26
50FDP-52-1,8M	300x260x585	28
50FDP-52-1,8M-G	300x260x585	30
50FDP-52-1,8T	300x260x585	26
50FDP-52-1,8T-G	300x260x585	28
50FDP-52-2,2T	300x260x585	27
50FDP-52-2,2T-G	300x260x585	29

40FDP-52-HH

DIMENSIONS

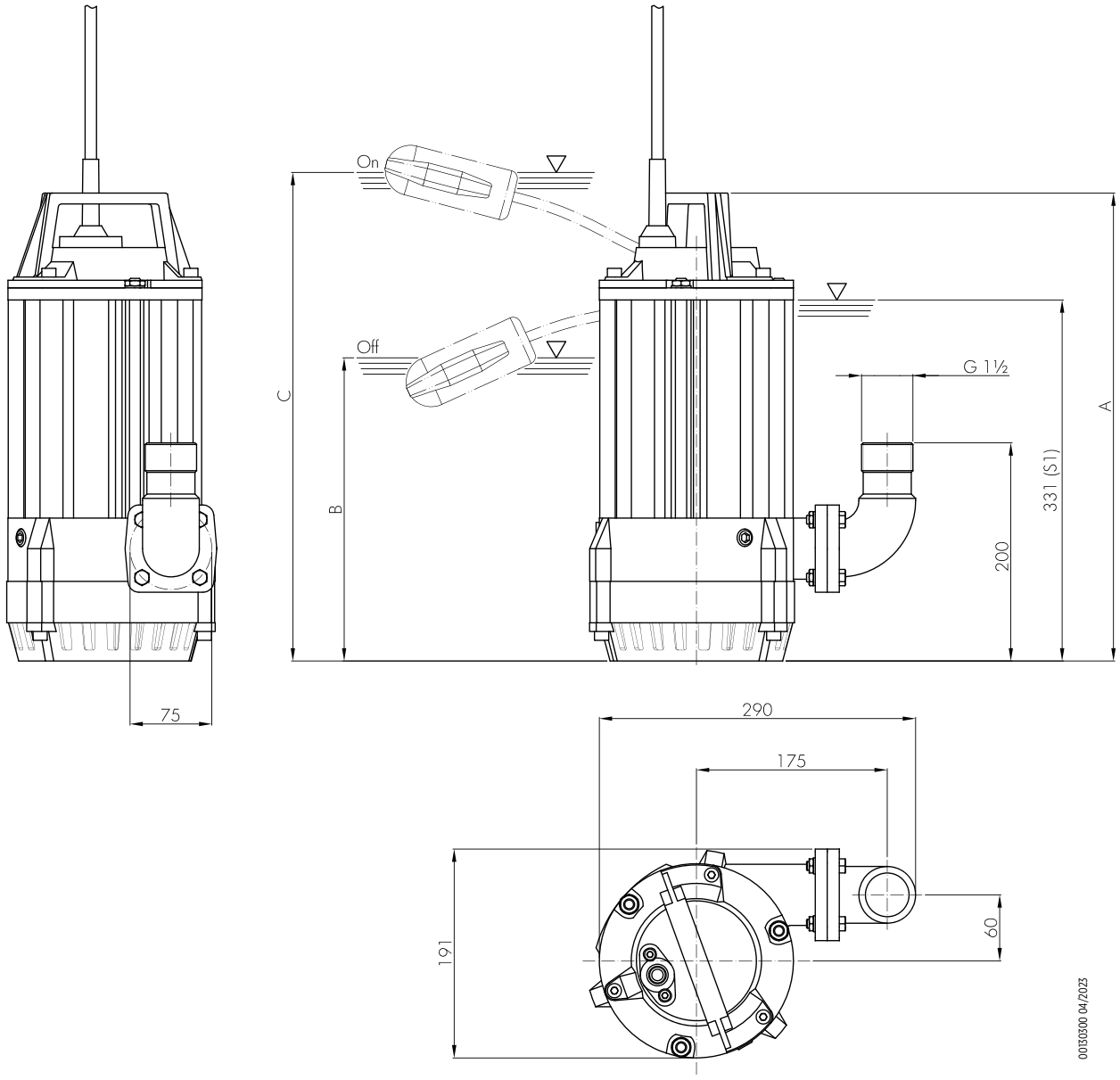

Pump model	Dimensions [mm]		
	A	B	C
40FDP-52-1,4M-HH	429	-	-
40FDP-52-1,4M-G-HH	469	250	570
40FDP-52-1,8M-HH	429	-	-
40FDP-52-1,8M-G-HH	469	250	570
40FDP-52-1,8T-HH	429	-	-
40FDP-52-1,8T-G-HH	469	250	570

Package		
Pump model	Dimensions [mm]	Weight [kg]
40FDP-52-1,4M-HH	290x245x585	23
40FDP-52-1,4M-G-HH	290x245x585	25
40FDP-52-1,8M-HH	290x245x585	26
40FDP-52-1,8M-G-HH	290x245x585	28
40FDP-52-1,8T-HH	255x205x560	22,7
40FDP-52-1,8T-G-HH	290x245x585	25

70-80FDP Series - Submersible drainage pumps

- Pump models:
  - 70FDP-52 (discharge Ø 70 mm)
  - 80FDP-52(discharge G3")
- Impeller features: open in martensitic Stainless steel
- Double mechanical seal in oil chamber
- Main components in aluminum to reduce weight
- Wear plate with NBR rubber coating
- External capacitor
- Wide range of available accessories
- Construction versions:
  - Polyurethane rubber coating
  - Threaded G2"½ M or G3" M discharge nozzle
  - Hose Ø 70 or Ø 80mm discharge nozzle



Alluminium components

Technical data

- Flow: up to 100.8 m^3/h
- Total Head: up to 23.3 m
- Motor power: 2.2 - 4.1 kW
- Minimum immersion depth: 457 mm
- Maximum immersion depth: 5 m
- Free passage: 6 mm

ACCESSORIES

- Storz coupling
- Sacrificial anodes belt
- For more information about accessories see p. 42



Cable lenght 10 m
(single-phase pumps with plug)

Motor with phase separators

Different discharge port options
Possibility to have hose holder or threaded discharge port

Double mechanical seal

Martensitic Stainless steel impeller

Wear plate
with NBR rubber coating



Open impeller

Drainage and dewatering (clear and turbid water)

Rainwater recovery

Emergency flood water drainage

Construction site drainage and dewatering

Mining, quarrying drainage and dewatering

Suitable fluids containing abrasive particles

70-80FDP Series - Submersible drainage pumps

PRODUCT IDENTIFICATION CODE

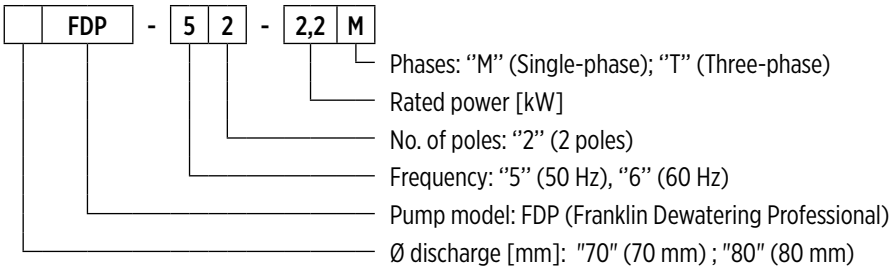

00140113 04/2026

GENERAL FEATURES

Materials/Constr.design		
Impeller		Martensitic stainless steel
External casing		Aluminium alloy
Pump body		Aluminium alloy
Cover		Aluminium alloy
Filter		Stainless steel AISI304
Wear plate		Aluminium alloy with NBR rubber coating
Mechanical seal	**motor side**	Graphite/Alumina
	pump side	Silicon carbide (SiC/SiC)
Motor shaft		Stainless steel AISI420
Power cable	**Type**	10 m H07RN-F
	Single-phase 70FDP-52-2,2M	4G2,5mm², capacitor box and SCHUKO plug (CEE 7/VII)
	Three-phase 80FDP-52-4,1T	4G2,5mm²
	Three-phase	4G1,5mm²
Motor		
Constr.design		asynchronous squirrel cage-type in dry chamber
Type		2 poles; 50 Hz
Insulation class		F
Protection degree		IP68
Voltage	**Single-phase**	230 V ±6%
	Three-phase	230V ±10%, 400V ±10%
Operating limits		
Maximum liquid temperature		+40 °C
pH of pumped liquid		5 - 8
Liquid density		1,1 kg/dm³
Maximum immersion depth		5 m
Min. immersion depth for continuous service		457 mm
Free passage		6 mm
Max. number of starting/hour		20
Construction options		

- 60 Hz version
- Different voltages
- With coating in composite material for wear protection (possible variations of the hydraulic performance)

70FDP-52

HYDRAULIC PERFORMANCE 50 HZ

Pump model	Q = Delivery								
	l/sec 0	2	4	6	8	10	12	15	20
	m^3/h 0	7,2	14,4	21,6	28,8	36	43,2	54	72
	US gpm 0	31,7	63,4	92,1	126,8	158,5	190,2	237,7	317
	H = Total meters head of water column [m]								
70FDP-52-2,2	16	**15**	**14**	**12,8**	**11,3**	**9,6**	**8**	**5**	
70FDP-52-3,5	21	**20,5**	**19,5**	**18,5**	**17**	**15,5**	**13,5**	**9,5**	**4**

Application range

TECHNICAL DATA

Pump model	Motor absorbed power P_1	Rated power P_2		Voltage	Rated current	Phases	Power cable		Float switch	Starting capacitor	Discharge port	Weight [kg]
	[kW]	[kW]	[HP]	[V]	[A]		Length [m]	Type		[µf]		
70FDP-52-2,2M	3	2,2	3	230	14	1 ~	10	4G2,5	-	50	Ø70	33
70FDP-52-2,2T	3	2,2	3	400	5,2	3 ~	10	4G1,5	-	-	Ø70	30
70FDP-52-3,5T	4,7	3,5	4,7	400	8	3 ~	10	4G1,5	-	-	Ø70	31

"-" = not available
• = available

80FDP-52

HYDRAULIC PERFORMANCE 50 HZ

Pump model	Q = Delivery										
	l/sec 0	2	4	6	8	10	12	15	20	25	28
	m^3/h 0	7,2	14,4	21,6	28,8	36	43,2	54	72	90	100,8
	US gpm 0	31,7	63,4	92,1	126,8	158,5	190,2	237,7	317	396,2	443,8
	H = Total meters head of water column [m]										
80FDP-52-4,1	23,3	**22,9**	**22,5**	**21**	**20,5**	**18,5**	**17,5**	**15,8**	**11,5**	**6,5**	**3,8**

Application range

TECHNICAL DATA

Pump model	Motor absorbed power P_1	Rated power P_2		Voltage	Rated current	Phases	Power cable		Float switch	Starting capacitor	Discharge port	Weight [kg]
	[kW]	[kW]	[HP]	[V]	[A]		Length [m]	Type		[µf]		
80FDP-52-4,1T	6,2	4,1	5,5	400	9,9	3 ~	10	4G2,5	-	-	G3	35

"-" = not available
• = available

70FDP-52 / 80FDP-52

PERFORMANCE CURVES AT 50 HZ

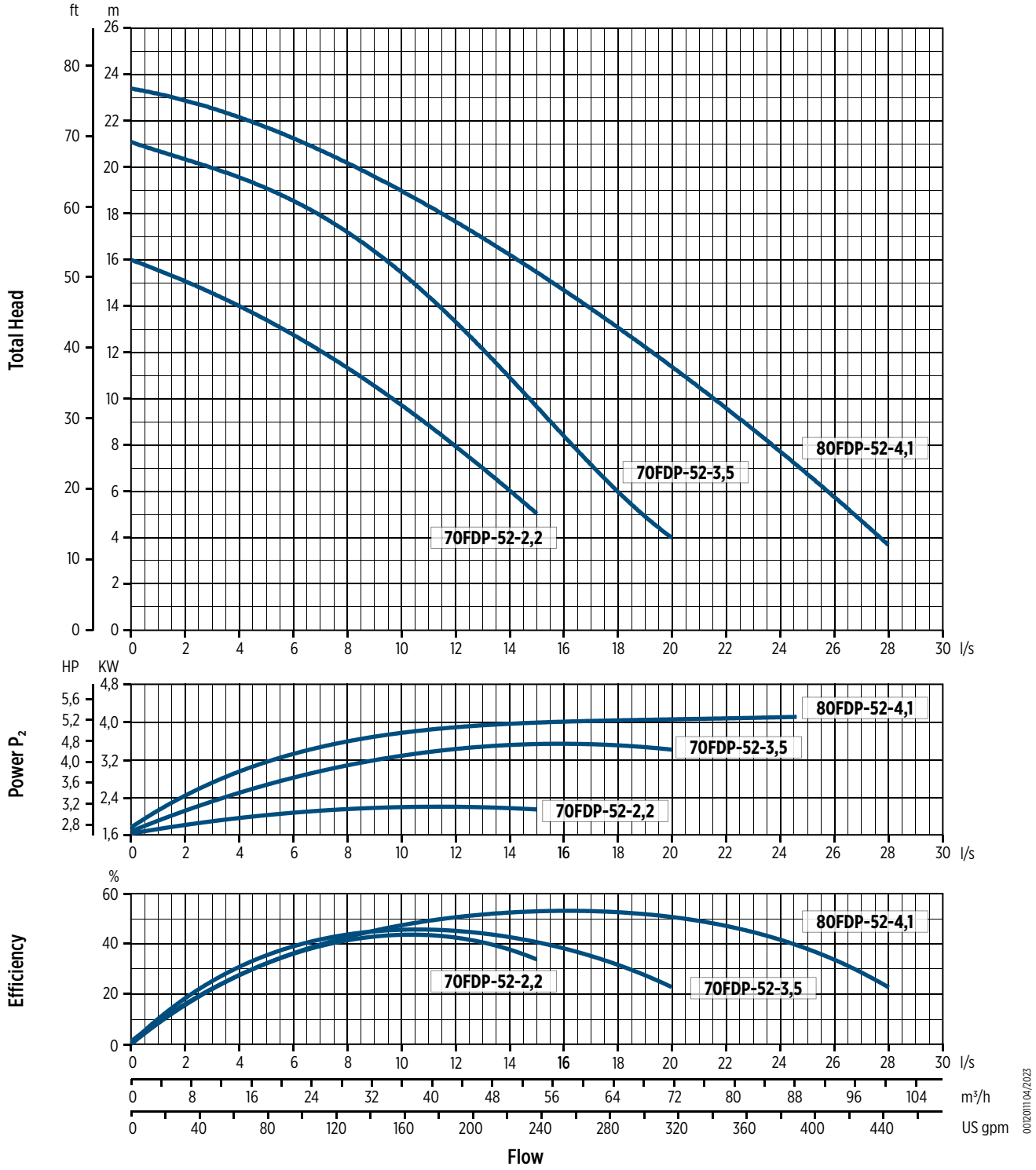

70FDP-52 / 80FDP-52

DIMENSIONS

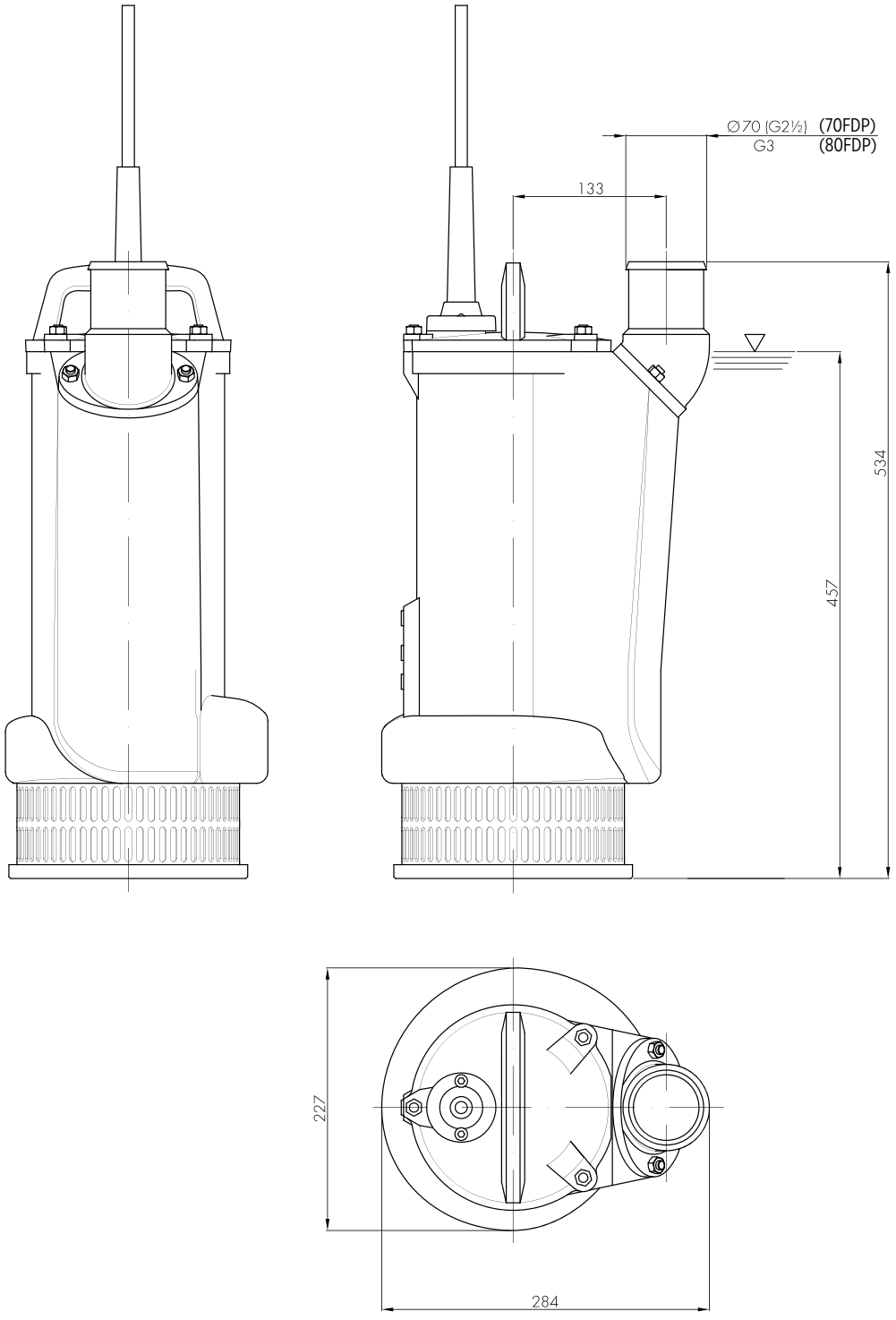

Package		
Pump model	Dimensions [mm]	Weight [kg]
70FDP-52-2,2	300x260x585	34
70FDP-52-3,5	290x245x585	32
80FDP-52-4,1	300x260x585	36

100-150FDP Series - Submersible drainage pumps



- Pump models:
  - 100FDP-52-...-LH
    (discharge Ø 100mm, Low Head version)
  - 100FDP-52-...-HH
    (discharge Ø 100mm, 2High Head version)
  - 150FDP-52-...-LH
    (discharge Ø 150mm, 2 poles motor, Low Head version)
- Impeller features: open impeller in High chrome cast iron
- Main components in cast iron and stainless steel
- Hydraulic parts with polyurethane rubber coating
- Cable length: 20 m
- Stainless steel handle
- Wide range of available accessories
- Construction versions:
  - Threaded G4" M discharge nozzle
    (100FDP-52, 150FPD-52-11, 150FPD-52-15)
  - Threaded G6" M discharge nozzle
    (100FDP-52-11, 100FDP-52-15, 150FPD-52)
  - Hose Ø150mm discharge nozzle (100FDP-52-11, 100FDP-52-15)
  - Hose Ø 100mm discharge nozzle (150FPD-52-11, 150FPD-52-15)

Technical data

- Flow: up to 252 m^3/h
- Total Head: up to 62 m
- Motor power: 5.5 - 15 kW
- Minimum immersion depth:
  - 150 mm (100FDP-52-5,5T / 100FDP-52-6,5T / 100FDP-52-8,1T)
  - 200 mm (100FDP-52-11-HH / 100FDP-52-15-HH / 150FDP-52-11-LH / 150FDP-52-15-LH)
- Maximum immersion depth: 15 m
- Free passage:
  - 6 mm (100FDP-52-5,5T / 100FDP-52-6,5T / 100FDP-52-8,1T)
  - 10 mm (100FDP-52-11-HH / 100FDP-52-15-HH / 150FDP-52-11-LH / 150FDP-52-15-LH)

ACCESSORIES

- Threaded discharge port
- Storz coupling
- Sacrificial anodes belt
- Conductivity probe
- For more information about accessories see p. 42

Cast iron and Stainless steel components

Motor with phase separators



Thermal probe
in the winding

Double mechanical seal

High chrome cast iron impeller



Open impeller

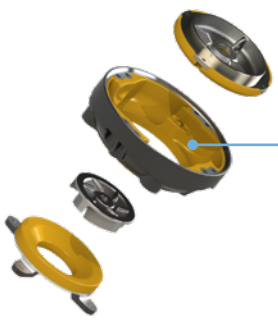

Poliuretanic rubber coating
components in contact with the fluid


Drainage and dewatering (clear and turbid water)


Rainwater recovery


Emergency flood water drainage


Construction site drainage and dewatering


Mining, quarrying drainage and dewatering


Suitable fluids containing abrasive particles

100-150FDP Series – Submersible drainage pumps

PRODUCT IDENTIFICATION CODE

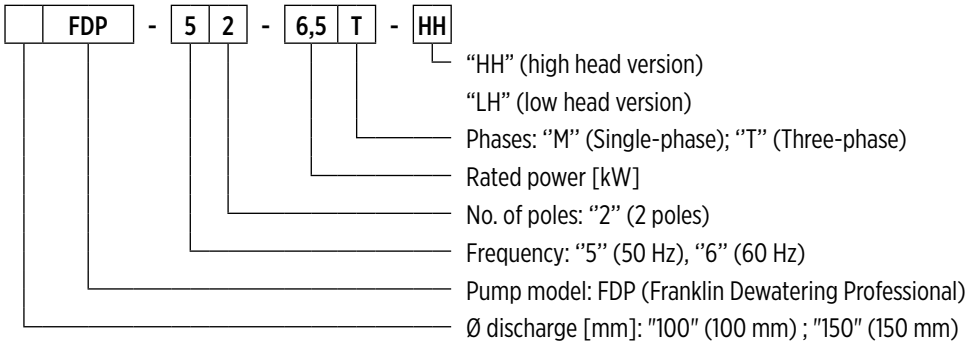

0040114 04/2026

GENERAL FEATURES

Materials/Constr.design		
Impeller		High chrome cast iron
External casing		Stainless steel AISI304
Pump body		Cast iron EN GJL 200 with poliuretanic rubber coating
Cover		Cast iron EN GJL250
Filter		Stainless steel AISI304
Wear plate		Cast iron EN GJL 250 with poliuretanic rubber coating
Mechanical seal	**motor side**	Graphite/Alumina
	pump side	Silicon carbide (SiC/SiC)
Motor shaft		Stainless steel AISI431
Power cable	**100FDP-52-5,5T / 100FDP-52-6,5T**	20 m 4G2,5+3x1mm², S1RN8-F type
	100FDP-52-8,1T	20 m 4G4+3x1mm², S1RN8-F type
	100FDP-52-11-HH / 100FDP-52-15-HH / 150FDP-52-11-LH / 150FDP-52-15-LH	20 m 7G4+2x1,5mm², 07RN-F type
Motor		
Constr.design		asynchronous squirrel cage-type in dry chamber
Type		2 poles; 50 Hz
Insulation class		F
Protection degree		IP68
Voltage	**Three-phase**	400V ±10%
Operating limits		
Maximum liquid temperature		+40 °C
pH of pumped liquid		6 - 10
Liquid density		1,1 kg/dm³
Maximum immersion depth		15 m
Maximum immersion depth	**100FDP-52-5,5T / 100FDP-52-6,5T / 100FDP-52-8,1T**	150 mm
	100FDP-52-11-HH / 100FDP-52-15-HH / 150FDP-52-11-LH / 150FDP-52-15-LH	200 mm
Free passage	**100FDP-52-5,5T / 100FDP-52-6,5T / 100FDP-52-8,1T**	10 mm
	100FDP-52-11-HH / 100FDP-52-15-HH / 150FDP-52-11-LH / 150FDP-52-15-LH	6 mm
Max. number of starting/hour		15
Construction options		

- 60 Hz version
- Different voltages
- Inner control of the thermal probes in the winding, control sequence and lack of phase (on request)

100FDP-52-5,5/ 100FDP-52-8,1

HYDRAULIC PERFORMANCE 50 HZ

Pump model	Q = Delivery											
	l/sec 0	2,5	5	10	15	20	25	30	35	40	45	50
	m^3/h 0	9	18	36	54	72	90	100,8	108	144	162	180
	US gpm 0	39,6	79,2	158,5	237,7	317	396,2	443,8	475,5	634	713,3	792,5
	H = Total meters head of water column [m]											
100FDP-52-5,5 LH	18,9		**17,5**	**15,7**	**13,4**	**11,3**	**9,1**	**7**	**5,1**	**2,5**		
100FDP-52-5,5 HH	30	**27,9**	**26**	**20,8**	**14,6**	**6,3**						
100FDP-52-6,5 LH	22,4		**21,4**	**20**	**17,6**	**15,1**	**12,7**	**10,9**	**8,8**	**6,6**	**3**	
100FDP-52-6,5 HH	35,3	**32,3**	**29,5**	**23,2**	**16,7**	**8,3**						
100FDP-52-8,1 LH	25,9		**24,6**	**22,9**	**20,7**	**18,3**	**15,9**	**14,1**	**12,1**	**9,7**	**6,8**	**3**
100FDP-52-8,1 HH	45	**40,7**	**36,6**	**28,8**	**20,2**	**10,1**						

Application range

TECHNICAL DATA

Pump model	Motor absorbed power P_1	Rated power P_2		Voltage	Rated current	Phases	Power cable		Float switch	Starting capacitor	Discharge port	Weight [kg]
	[kW]	[kW]	[HP]	[V]	[A]		Length [m]	Type		[µf]		
100FDP-52-5,5T-LH	6	5,5	7,5	400	11	3 ~	20	4G2,5+3x1	-	-	Ø100	125
100FDP-52-5,5T-HH	6	5,5	7,5	400	11	3 ~	20	4G2,5+3x1	-	-	Ø100	125
100FDP-52-6,5T-LH	7,2	6,5	8,8	400	13	3 ~	20	4G2,5+3x1	-	-	Ø100	130
100FDP-52-6,5T-HH	7,2	6,5	8,8	400	13	3 ~	20	4G2,5+3x1	-	-	Ø100	130
100FDP-52-8,1T-LH	9	8,1	11	400	16	3 ~	20	4G4+3x1	-	-	Ø100	135
100FDP-52-8,1T-HH	9	8,1	11	400	15	3 ~	20	4G4+3x1	-	-	Ø100	135

"-" = not available
• = available

100FDP-52-5,5/ 100FDP-52-8,1

PERFORMANCE CURVES AT 50 HZ

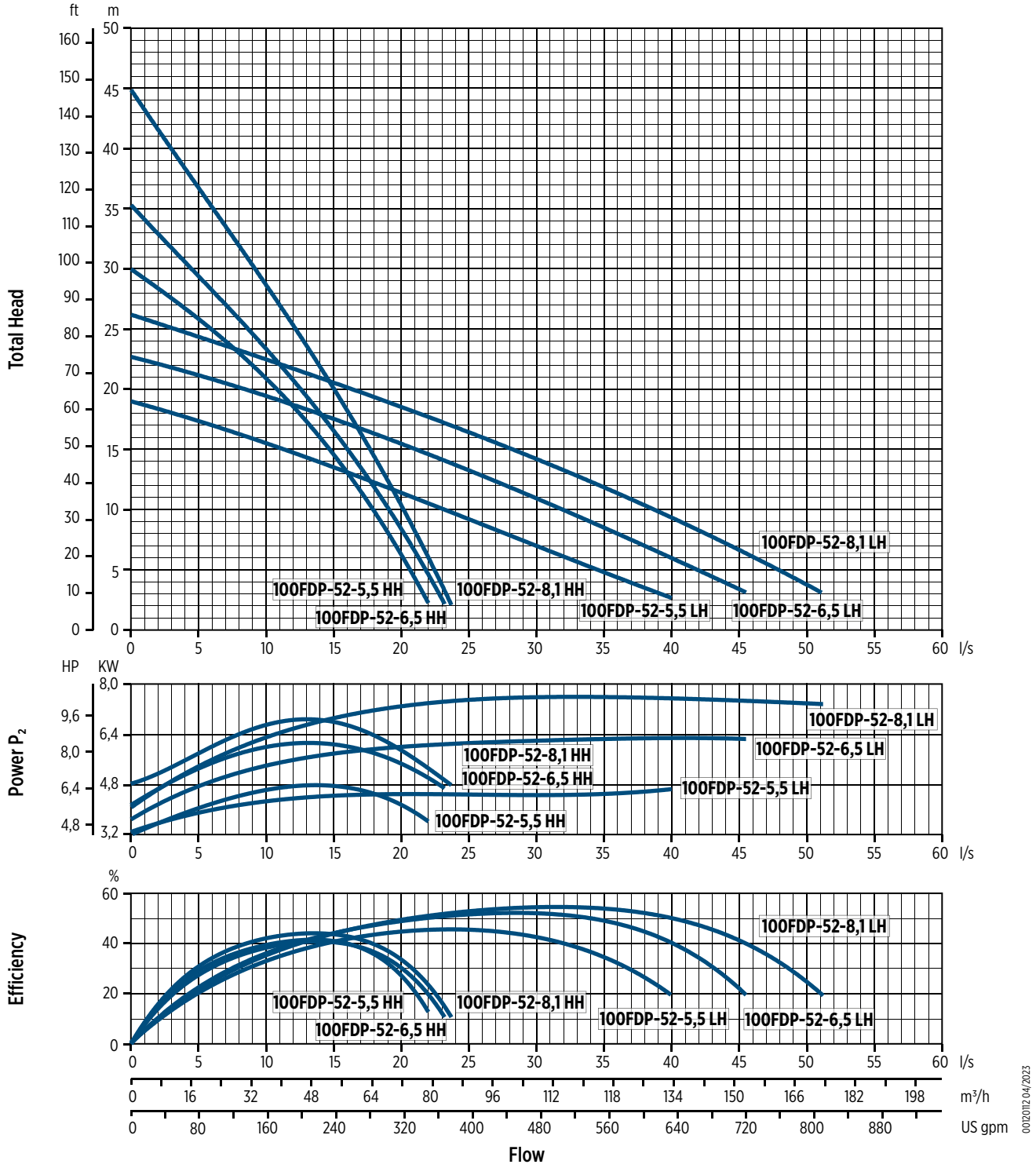

The hydraulic characteristics are guaranteed, according to ISO standard 9906:2012, grade 3B

100FDP-52-5,5/ 100FDP-52-8,1

DIMENSIONS

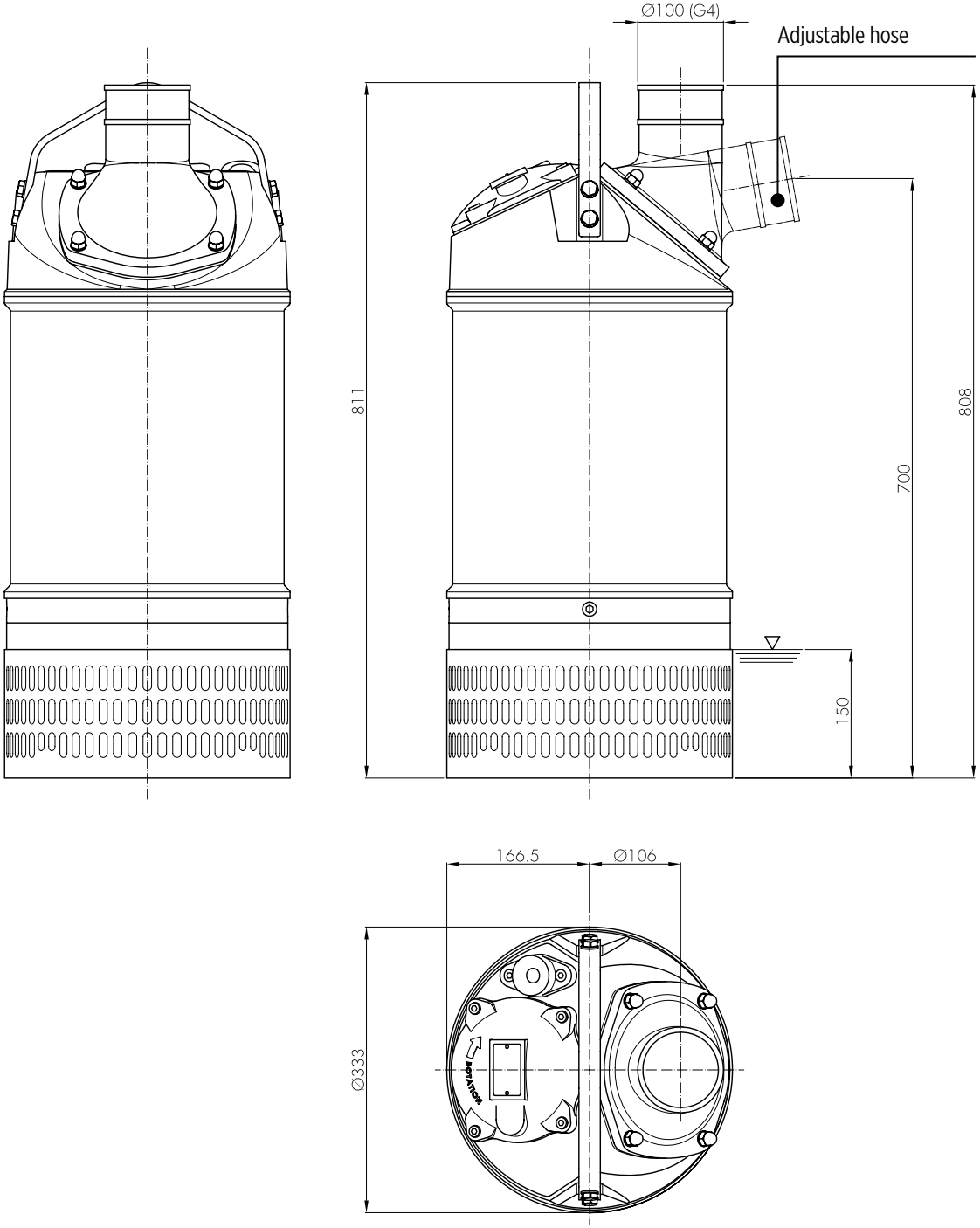

Package		
Pump model	Dimensions [mm]	Weight [kg]
100FDP-52-5,5T-LH	475x370x985	128
100FDP-52-5,5T-HH		128
100FDP-52-6,5T-LH		133
100FDP-52-6,5T-HH		133
100FDP-52-8,1T-LH		138
100FDP-52-8,1T-HH		138

100FDP-52-11 / 100FDP-52-15

HYDRAULIC PERFORMANCE 50 HZ

Pump model	Q = Delivery							
	l/sec 0	5	10	15	20	25	30	35
	m^3/h 0	18	36	54	72	90	100,8	108
	US gpm 0	79,2	158,5	237,7	317	396,2	443,8	475,5
	H = Total meters head of water column [m]							
100FDP-52-11 HH	60	**52,8**	**44,9**	**35,3**	**24**	**10**		
100FDP-52-15 HH	62	**54,6**	**48,4**	**42**	**35,1**	**25,8**	**16,4**	**2,3**

Application range

TECHNICAL DATA

Pump model	Motor absorbed power P_1	Rated power P_2		Voltage	Rated current	Phases	Power cable		Float switch	Starting capacitor	Discharge port	Weight [kg]
	[kW]	[kW]	[HP]	[V]	[A]		Length [m]	Type		[µf]		
100FDP-52-11T-HH	13	11	14,9	400	22	3 ~	20	7G4+2x1,5	-	-	Ø100	192
100FDP-52-15T-HH	17	15	20,4	400	28	3 ~	20	7G4+2x1,5	-	-	Ø100	204

"-" = not available
• = available

150FDP-52-11 / 150FDP-52-15

HYDRAULIC PERFORMANCE 50 HZ

Pump model	Q = Delivery														
	l/sec 0	5	10	15	20	25	30	35	40	45	50	55	60	65	70
	m^3/h 0	18	36	54	72	90	100,8	108	144	162	180	198	216	234	252
	US gpm 0	79,2	158,5	237,7	317	396,2	443,8	475,5	634	713,3	792,5	871,8	951	1.030,3	1.109,5
	H = Total meters head of water column [m]														
150FDP-52-11 LH	30	**28,3**	**26,8**	**24,8**	**22,8**	**21**	**19,3**	**17,2**	**15,3**	**13**	**10,7**	**6,7**	**3**		
150FDP-52-15 LH	32	**30,6**	**29,3**	**27,8**	**26,4**	**24,3**	**22,3**	**20,3**	**18,5**	**16,6**	**14,8**	**12,4**	**10,1**	**6**	**2**

Application range

TECHNICAL DATA

Pump model	Motor absorbed power P_1	Rated power P_2		Voltage	Rated current	Phases	Power cable		Float switch	Starting capacitor	Discharge port	Weight [kg]
	[kW]	[kW]	[HP]	[V]	[A]		Length [m]	Type		[µf]		
150FDP-52-11T-LH	13	11	14,9	400	22	3 ~	20	7G4+2x1,5	-	-	Ø150	192
150FDP-52-15T-LH	17	15	20,4	400	28	3 ~	20	7G4+2x1,5	-	-	Ø150	204

"-" = not available
• = available

100FDP-52-11 / 100FDP-52-15 / 150FDP-52-11 / 150FDP-52-15

PERFORMANCE CURVES AT 50 HZ

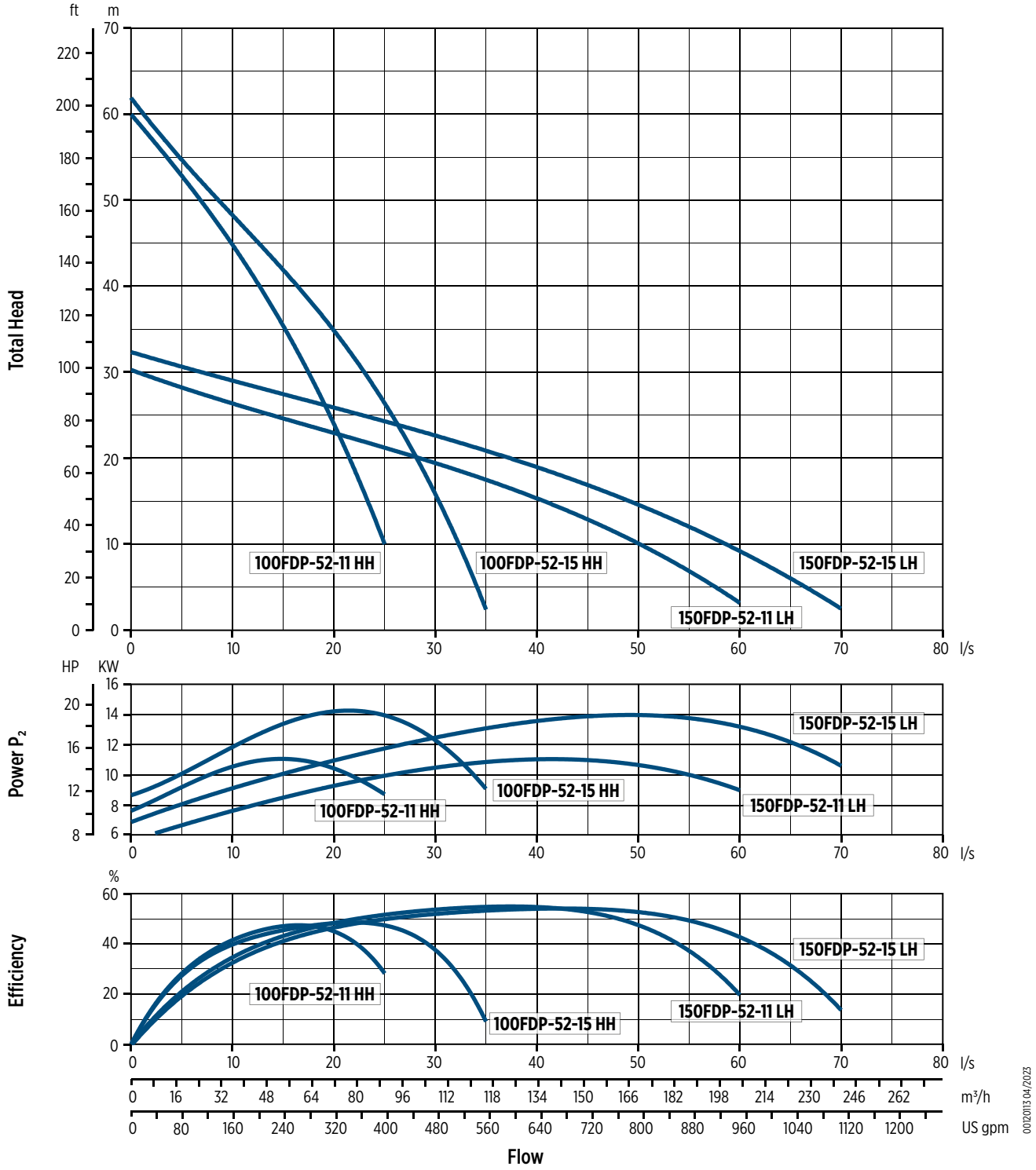

100FDP-52-11 / 100FDP-52-15 / 150FDP-52-11 / 150FDP-52-15

DIMENSIONS

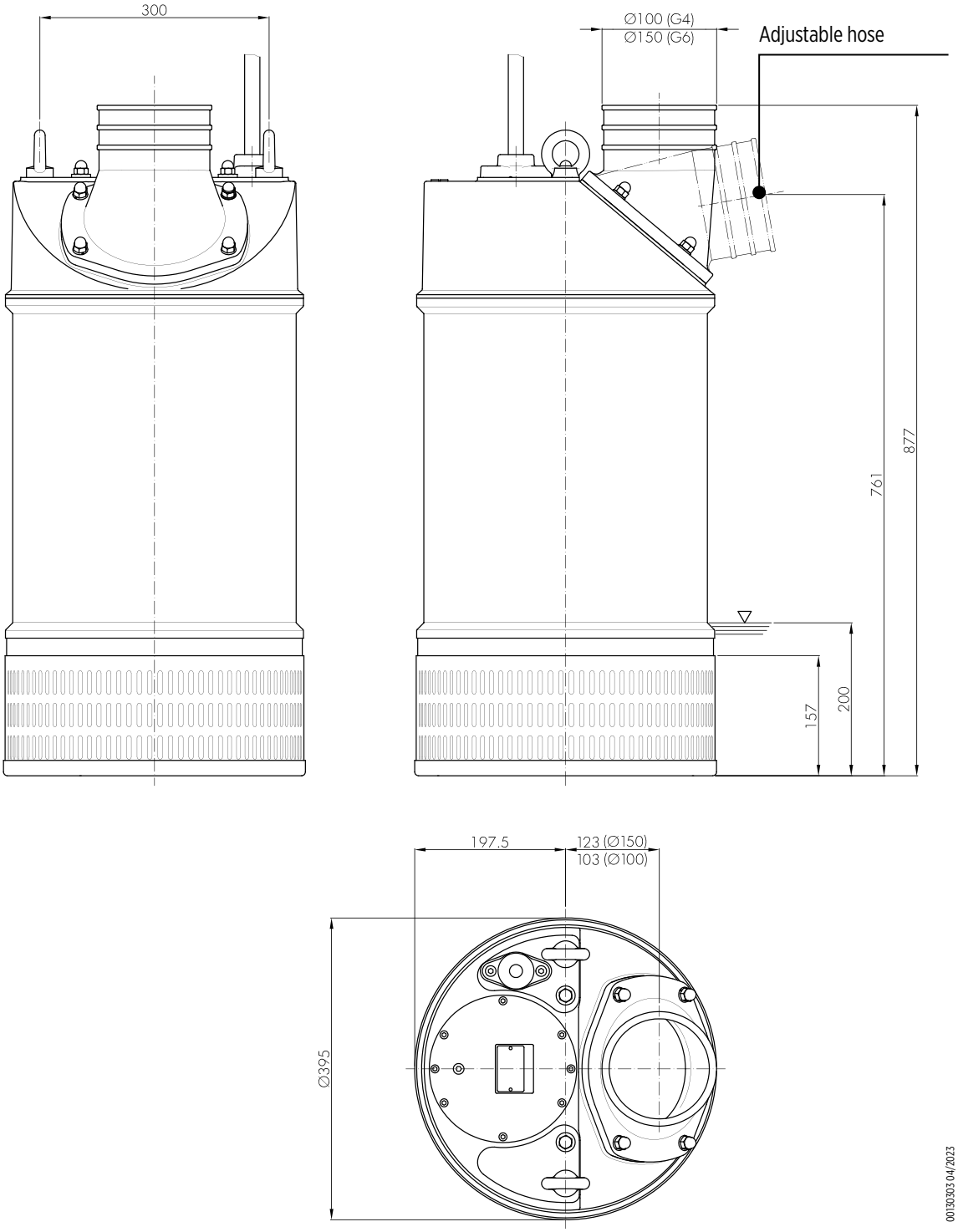

Package		
Pump model	Dimensions [mm]	Weight [kg]
150FDP-52-11T-LH	620x420x1030	196
100FDP-52-11T-HH		196
150FDP-52-15T-LH		208
100FDP-52-15T-HH		208

150FDP Series – Submersible drainage pumps

- Pump model:
  - 150FDP-52 (discharge Ø 150 mm)
- Impeller features: open impeller in Stainless steel AISI 304
- Double mechanical seal
- Cable length: 20 m
- Stainless steel handle
- Wide range of accessories available
- Construction versions: Threaded G6" M discharge nozzle



Technical data

- Flow: up to 324 m^3/h
- Total Head: up to 35 m
- Motor power: 22 kW
- Minimum immersion depth: 350 mm
- Maximum immersion depth: 15 m
- Free passage: 7 mm

ACCESSORIES

- Threaded discharge port
- Storz coupling
- Sacrificial anodes belt
- For more information about accessories see p. 42



Alluminium alloy and Stainless steel components

Motor with phase separators

Thermal probe
in the winding

Double mechanical seal

High chrome cast iron impeller



Open impeller



Poliuretanic rubber coating
components in contact with the fluid

Drainage and dewatering (clear and turbid water)

Rainwater recovery

Emergency flood water drainage

Construction site drainage and dewatering

Mining, quarrying drainage and dewatering

Suitable fluids containing abrasive particles

150FDP Series – Submersible drainage pumps

PRODUCT IDENTIFICATION CODE

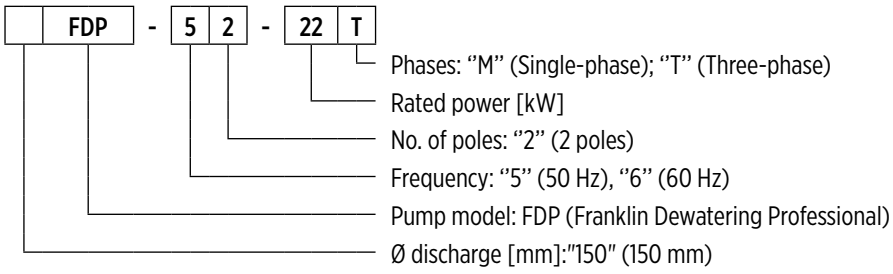

00140115 04/2026

GENERAL FEATURES

Materials/Constr.design		
Impeller		Stainless steel AISI304
External casing		Aluminium alloy
Pump body		Aluminium alloy with Polyurethane rubber coating
Cover		Aluminium alloy
Filter		Aluminium alloy
Wear plate		Stainless steel AISI304 with Polyurethane rubber coating
Mechanical seal	**motor side**	Graphite/Alumina
	pump side	Silicon carbide (SiC/SiC)
Motor shaft		Stainless steel AISI431
Power cable		20 m 7G4+2x1,5mm², 07RN-F type
Motor		
Constr.design		asynchronous squirrel cage-type in dry chamber
Type		2 poles; 50 Hz
Insulation class		F
Protection degree		IP68
Voltage	**Three-phase**	400V ±10%
Operating limits		
Maximum liquid temperature		+40 °C
pH of pumped liquid		5 - 8
Liquid density		1,1 kg/dm³
Maximum immersion depth		15 m
Min. immersion depth for continuous service		350 mm
Free passage		7 mm
Max. number of starting/hour		10
Construction options		

- 60 Hz version
- Different voltages

150FDP-52-22

HYDRAULIC PERFORMANCE 50 HZ

Pump model	Q = Delivery											
	l/sec 0	20	25	30	35	40	45	50	60	70	80	90
	m^3/h 0	72	90	100,8	108	144	162	180	216	252	288	324
	US gpm 0	317	396,2	443,8	475,5	634	713,3	792,5	951	1.109,5	1.268	1.426,5
	H = Total meters head of water column [m]											
150FDP-52-22	35	**32**	**31**	**29**	**28**	**26**	**24**	**22**	**18,5**	**15**	**11**	**5**

Application range

TECHNICAL DATA

Pump model	Motor absorbed power P_1	Rated power P_2		Voltage	Rated current	Phases	Power cable		Float switch	Starting capacitor	Discharge port	Weight [kg]
	[kW]	[kW]	[HP]	[V]	[A]		Length [m]	Type		[µf]		
150FDP-52-22T	28	22	30	400	46	3 ~	20	7G4+2x1,5	-	-	Ø150	183

"-" = not available
• = available

150FDP-52-22

PERFORMANCE CURVES AT 50 HZ

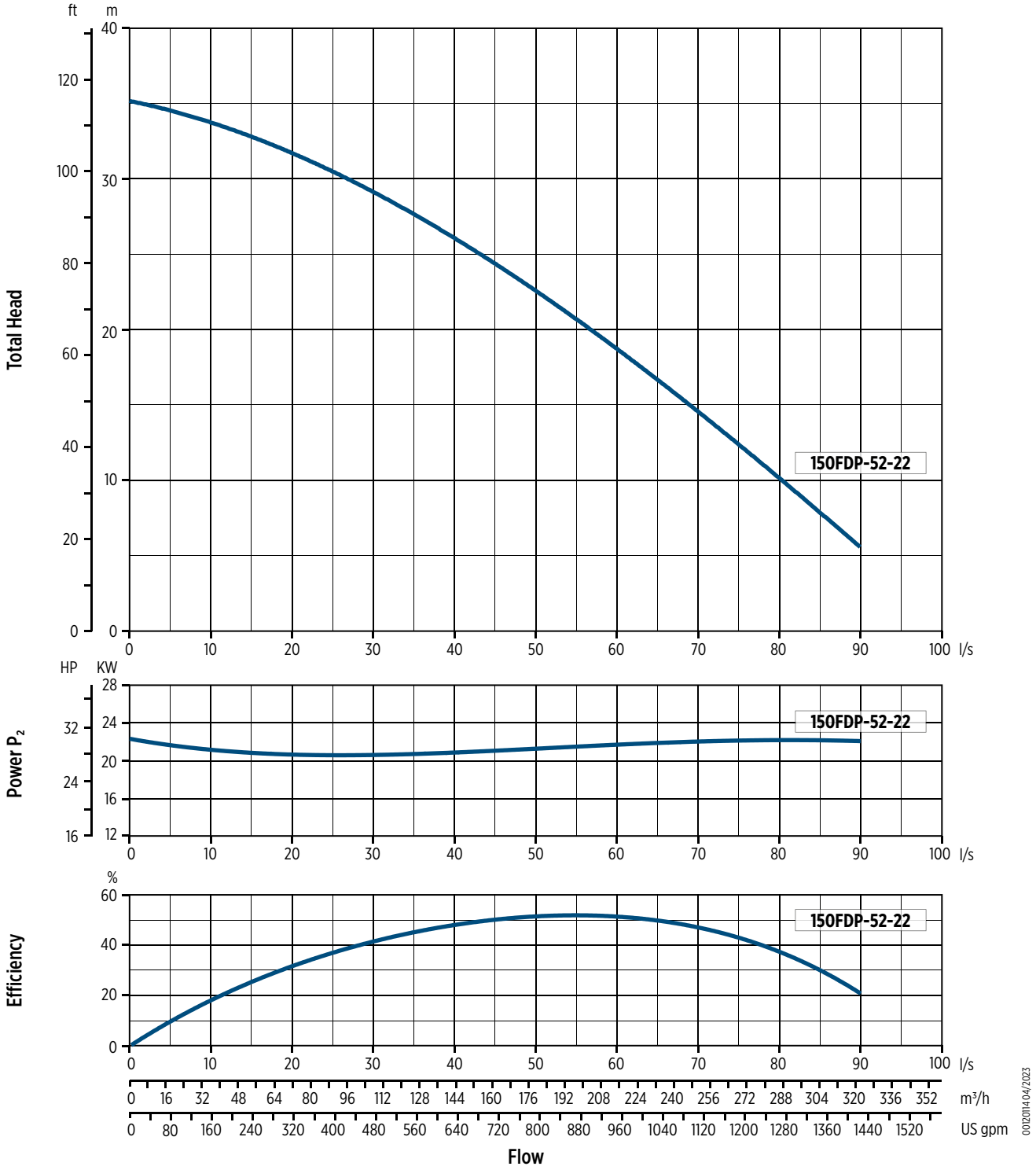

The hydraulic characteristics are guaranteed, according to ISO standard 9906:2012, grade 3B

150FDP-52-22

DIMENSIONS

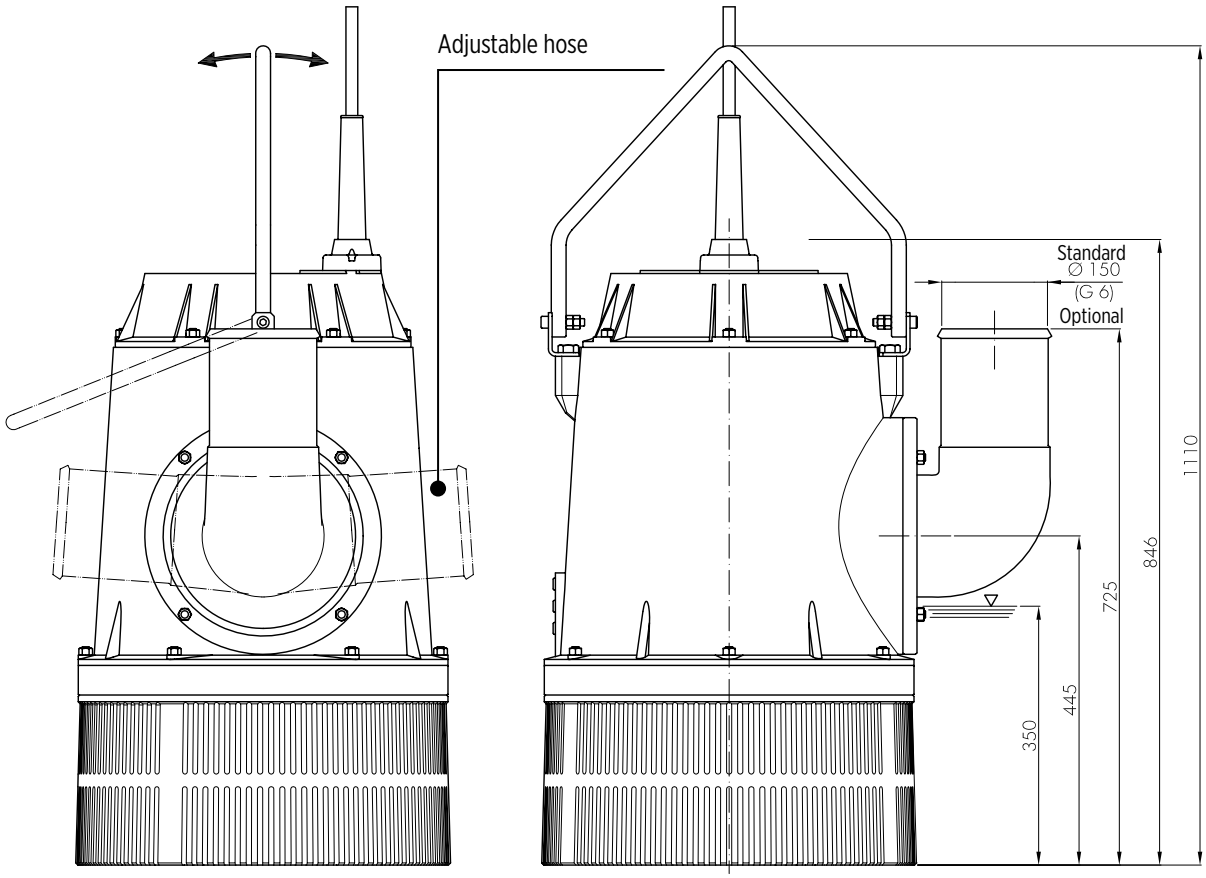

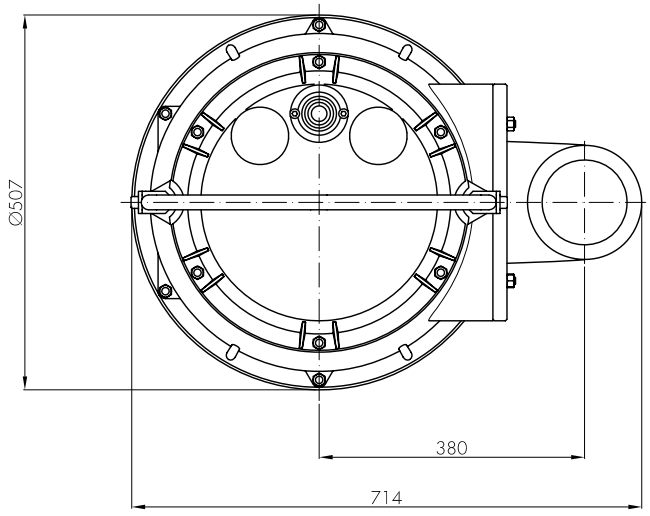

00130304 04/2023

Package		
Pump model	Dimensions [mm]	Weight [kg]
150FDP-52-22T	650x800x1200	233

ACCESSORIES

Accessories type		FDX Series		FDP Series						
		40FDX	50FDX	40FDP	50FDP	70-80FDP	100FDP 5.5-6.5-8.1kW	100FDP 11-15kW	150FDP 11-15kW	150FDP 22kW
Hose connection elbow		G1"1/2 M - Ø40 8640XB	G2" M - Ø50 908659B	-	-	-	-	-	-	
Storz coupling		-	-	DN52(C)/ G1"½ F 208626B	DN52(C)/ G2" M 208630B	DN75(B)/ G2"½ F 208622B DN75(B)/ G3" F 208624B	DN110(A)/ G4" F 208621B	DN110(A)/ G4" F 208621B DN150/G6" F 208620B	DN150/G6" F 208620B DN110(A)/ G4" F 208621B	DN150/G6" F 208620B
Sacrificial anodes belt	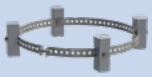	-	-	-	-	908713	908717	908711	908711	908715

Accessories type		5m	10m	15m	20m
Float switch for clear water		902604B	902601B	902612B	902603B
Float switch for sewage		902609B	902605B	902606B	902607B

CONSTRUCTION VERSIONS

Pump model	Description
50FDP	NBR rubber coating on wear plate
70FDP	Polyurethane rubber coating on wear plate
	Threaded G2"½ M discharge nozzle
	Threaded G3" M discharge nozzle
80FDP	Polyurethane rubber coating on wear plate
	Hose Ø 70 mm discharge nozzle
	Threaded G2"½ M discharge nozzle
100FDP-52-5,5 / 100FDP-52-6,5 / 100FDP-52-8,1	Threaded G4" M discharge nozzle
100FDP-52-11/ 100FDP-52-15	Threaded G4" M discharge nozzle
	Hose Ø150mm discharge nozzle
	Threaded G6" M discharge nozzle
150FDP-52-11/ 150FDP-52-15	Threaded G6" M discharge nozzle
	Hose Ø 100mm discharge nozzle
	Threaded G4" M discharge nozzle
150FDP-52-22	Threaded G6" M discharge nozzle

CATALOG REVISION CHANGES NOTICE

Rev. No.	Changes	Page
01	150FDP Performance curves graphic scale correction	48
	40FDR and 50FDR General Features motor voltage single-phase correction	6, 12
02	70/80 FDP serie General Features table correction	30
04	Deleted FDR Serie	-
	Added FDX Series	All
	Added accessories section	5 - 14
	Added construction options section	43



Franklin Electric

franklinwater.eu

Franklin Electric Europa GmbH
Rudolf-Diesel-Str. 20 - 54516 Wittlich
ALMANYA
Telefon: +49 (0) 6571 - 105-0
Faks: +49 (0) 6571 - 105-510
E-posta: info@franklin-electric.de

Franklin Electric S.r.l.
Via Asolo, 7 - 36031 Dueville (Vicenza)
ITALY
Phone: +39 0444 361114
Fax: +39 0444 365247
Email: sales.it@fele.com

10000015089 EN REV.04_04-2026

Single member - Company subject to the control and coordination of Franklin Electric Co., Inc.
Franklin Electric reserves the right to amend specification without prior notice.