6" ENCAPSULATED PERMANENT MAGNET (PM) MOTOR

HIGH EFFICIENCY

FEATURES & BENEFITS

- The permanent magnet synchronous motor provides superior efficiency, excellent energy savings and strong reliability.
- Instead of a short-circuit induction type rotor, the high efficiency motor contains a permanent magnet rotor design with buried magnets and magnetic core segments.
- The permanent magnet motor design eliminates electrical rotor losses resulting in lower motor amps, improved partial load behavior and reduced temperature heat rise.
- The PM motor has a lower weight, a reduced length and requires lower Amps to run at the same pump load.
- For operation with Variable frequency drive (VFD)
- Double-flange NEMA mounting design
- Stainless steel splined shaft
- StatorShield™ - Franklin encapsulation system: Franklin Electric encapsulated motors are equipped with hermetically-sealed windings. The stator resin mechanically supports the winding and provides fast heat dissipation.
- Hydrodynamic liquid lubricated radial bearings and High capacity Kingsbury type thrust bearing for 100 % maintenance free operation
- Field replaceable lead using Franklin's exclusive Water Bloc technology
- Pressure-equalizing diaphragm, spring pre-loaded
- SandFighter™ sealing system with SIC mechanical seal and sand slinger
- Standard motor: WW- Water well design (stator: 304SS / castings: CI powder coated)
- Factory filled with FES Franklin's non-toxic water soluble fill solution
- Drinking water approvals

STANDARD SPECIFICATION

- Ratings: 4 - 45 kW (100 Hz - 3000 rpm)
- Thrust load: 15.5 kN: 4-22 kW; 27.5 kN: 26-45 kW
- Max. storage temperature: -15°C - +60°C
- Nominal ambient temperature: 30 °C
  4-22 kW (with 0.16 m/s cooling flow)
  > 22 kW (with 0.5 m/s cooling flow)
- System Supply Voltage: 380 V (100 Hz)
- Voltage tolerance U_N: ±10 %
- protection IP68
- Insulation class F
- Protection requirements: DIN/EN 60947-4-1
- Frequency of starts: 20 starts/ hour (with min. 3 minutes resting time), equally distributed)
- DOL-start
- All motors with factory installed leads
- Installation orientation: Vertical / horizontal (shaft end heightened)
- Rotation counter clock wise facing shaft end (rotation reversible for 3 phase motors)

OPTIONS

- Higher-graded material: 304SS, 316SS
- Special voltages
- 45 kN High Thrust version
- Retrofitable PT 100 temperature sensor
- Special lead lengths
- 120 Hz electrical design
- High Efficiency system solution

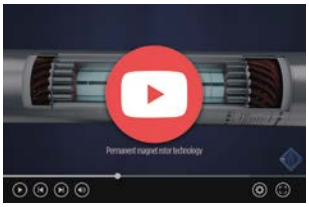

Permanent magnet technology in submersible motors

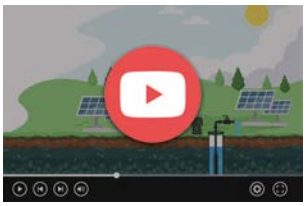

Cost savings of Franklin Electric High Efficiency Systems

High Efficiency System

Variable Frequency drives & Accessories

Franklin Electric

6" ENCAPSULATED PERMANENT MAGNET (PM) MOTOR

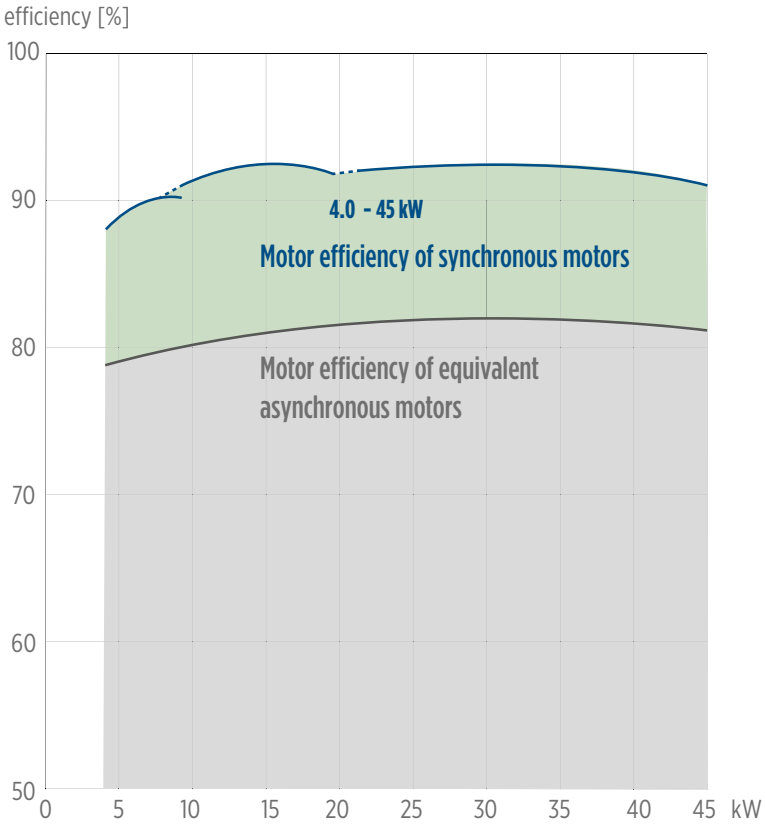

SAND FIGHTER

STAINLESS STEEL 304

STAINLESS STEEL 316

HIGH EFFICIENCY

Permanent Magnet Technology

Instead of a short-circuit induction type rotor, the high efficiency motor contains a permanent magnet rotor design with buried magnets and magnetic core segments.

High efficiency electrical design for low operation costs

The permanent magnet synchronous motor provides superior efficiency, excellent energy savings and strong reliability.

Reduced motor length and weight

The PM motor has a lower weight, a reduced length and requires lower Amps to run at the same pump load.

No electrical rotor losses

The permanent magnet motor design eliminates electrical rotor losses resulting in lower motor amps, improved partial load behavior and reduced temperature heat rise.

6" ENCAPSULATED PERMANENT MAGNET (PM) MOTOR

6CT PM MOTOR - 3-PHASE - MOTOR MODEL NO. | DOL | 100 HZ | 380V

P_N [kW]	U_N [V]	Thrust F [N]	Digit 1 - 6	Digit 7 - 10 Single pack with pre-installed lead		
				WW	304SS	Standard 316SS
4 - 11	380	15500	236 080	9561	1461	1561
13 - 22	380	15500	236 084	9561	1461	1561
26 - 45	380	27500	236 086	9561	1461	1561

6CT PM MOTOR - 3-PHASE - MOTOR PERFORMANCE DATA | 4-45 KW | 100 HZ

motor model no.	P_N [kW]	Thrust F [N]	U_N [V]	n_N [min^{-1}]	I_N [A]	I_A/I_N [A]	η [%]	cos phi	T_N [Nm]	T_A/T_N [Nm]
236 080 xxxx	4	15500	380	3000	9,2	1	87,1	0,95	12,7	1
	5.5				11,0	1	89,8	0,95	17,5	1
	7.5				14,1	1	90,9	0,95	23,9	1
236 080 xxxx	9.3	15500	380	3000	17,2	1	91,2	0,95	29,6	1
	11				20,5	1	90,9	0,95	35,0	1
236 084 xxxx	13	15500	380	3000	25,3	1	91,4	0,95	41,4	1
	15				28,3	1	91.8	0,95	47.7	1
236 084 xxxx	18.5	15500	380	3000	34,1	1	92.1	0,95	58.9	1
236 084 xxxx	22	15500	380	3000	40,7	1	92	0,95	70	1
236 086 xxxx	26	27500	380	3000	51,2	1	92.3	0,95	82.8	1
	30				57,8	1	92,5	0,95	95,5	1
236 086 xxxx	37	27500	380	3000	71,3	1	92,1	0,95	117,8	1
236 086 xxxx	45	27500	380	3000	90,0	1	90,8	0,95	143,2	1

6CT PM MOTOR - 3-PHASE - MOTOR PART DESCRIPTION | WW | 304SS | 316SS

part	WW	304SS	316SS
Shell	1.4301	1.4301	1.4571
Upper end bell	Cast iron powder coated	1.4301	1.4408
Thrust housing	Cast iron powder coated	1.4301	1.4408
Mechanical seal	SiC / SiC	SiC / SiC	SiC / SiC
Seal cover	1.4301	1.4301	1.4401
Slinger	EPDM	EPDM	EPDM
Shaft end*	14021	14021	14462
Diaphragm	EPDM	EPDM	EPDM
Lead	EPR	EPR	EPR

* running change to 1.4462 (WIP)

Franklin Electric

6" ENCAPSULATED PERMANENT MAGNET (PM) MOTOR

6CT PM MOTOR - 3-PHASE - DIMENSIONS AND WEIGHTS | WW | 304SS | 316SS

WW

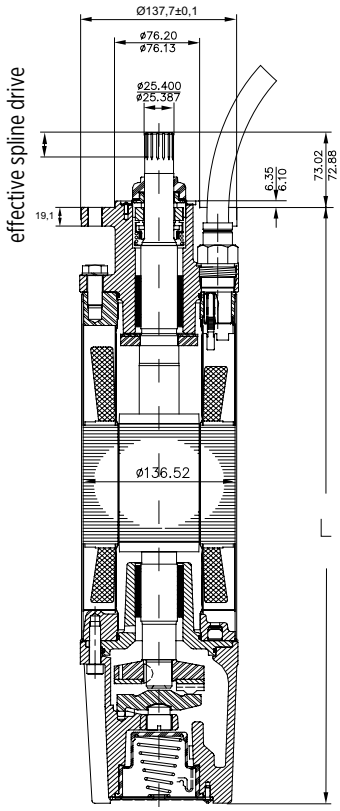

304SS | 316SS

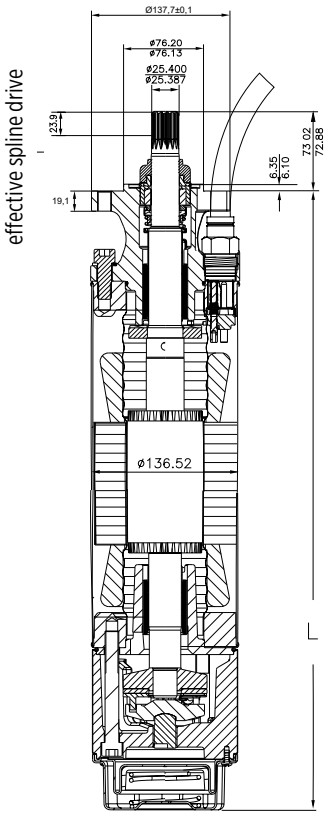

upper end bell WW | 304SS | 316SS

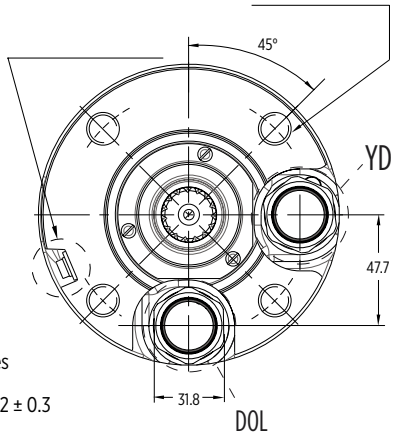

4 threaded holes
1/2-20 UNF-2B
hole circle Ø 111.2 ± 0.3

Tolerances according to NEMA MG 1-18.388

P_N [kW]	U_N [V]	Thrust F [N]	length [mm]		weight [kg]	motor with lead in single pack		motor packaging
			WW	314SS | 316SS		B x H x L [mm]	weight [kg]	
4 - 11	380	15500	634.5	625.2	43	155 x 340 x 800	45	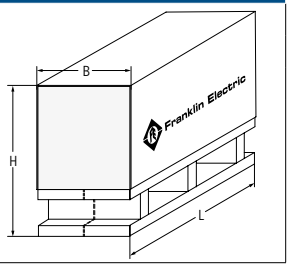
13 - 22	380	15500	793,5	784,2	57,4	155 x 340 x 1070	61	
26 - 45	380	27500	1020,5	1011,2	78,0	155 x 340 x 1070	84	

HIGH EFFICIENCY

6" ENCAPSULATED PERMANENT MAGNET (PM) MOTOR

6CT PM MOTOR - 3-PHASE - MOTOR LEADS | CONNECTIONS

4G4 mm²	3 x 8,4 + 1G 8,4 mm²	Electrical connection

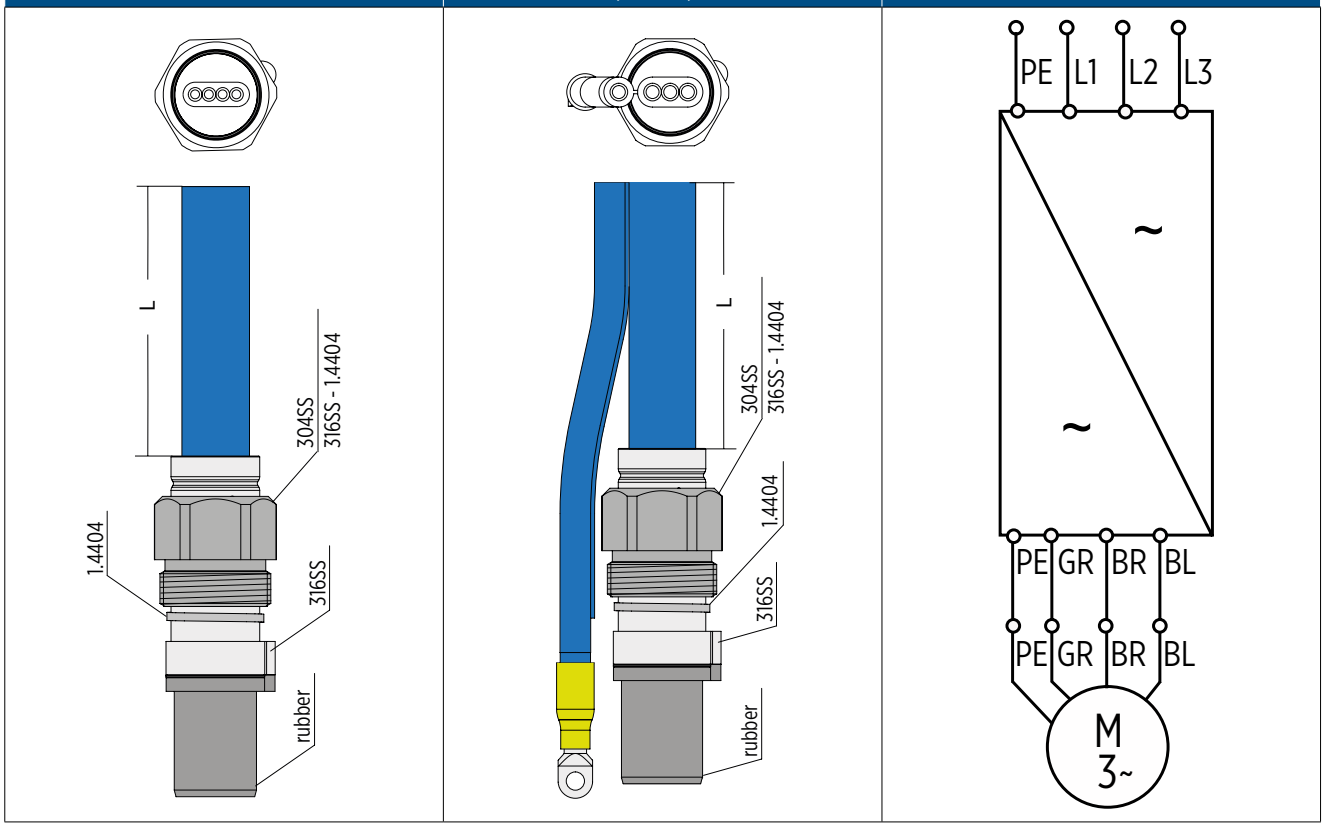

U = black (BK)|V = grey (GY)|W = brown (BN)|PE = yellow/green (YE/GN)

Motor leads 4 - 22 kW						
Ø [mm²]	C [mm]	B [mm]	H [mm]	length L [m]	WW	316SS
4G4	32	19	7	4	310 125 004	310 125 504

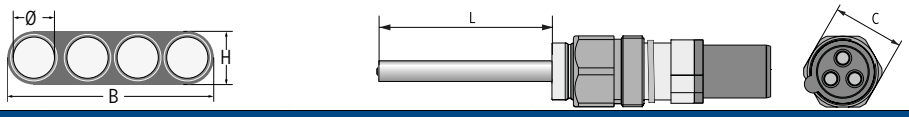

Motor leads 26 - 45 kW							
Ø [mm²]	C [mm]	B [mm]	B1 [mm]	B1 [mm]	H [mm]	WW	316SS
3x8,4 + 1G8,4	32	29.5	19.5	19.5	8.9	310 145 004	310 145 504

Cables are designed for submerged operation. For air operation, please consult Franklin Electric.

6CT PM MOTOR - 3-PHASE - WINDING RESISTANCE DATA | 380V | 100 HZ

P_N [kW]	U_N [V]	stator reference no.	U - V [Ohm]*	rotor reference no.
4 - 11	380	327 245 ...	0,86	178 130 921
13 - 22	380	327 250 ...	0,33	178 130 923
26 - 45	380	327 257 ...	0,19	178 130 925

6" ENCAPSULATED PERMANENT MAGNET (PM) MOTOR

6CT PM MOTOR - 3-PHASE - MOTOR SPARE PARTS - KITS | WW

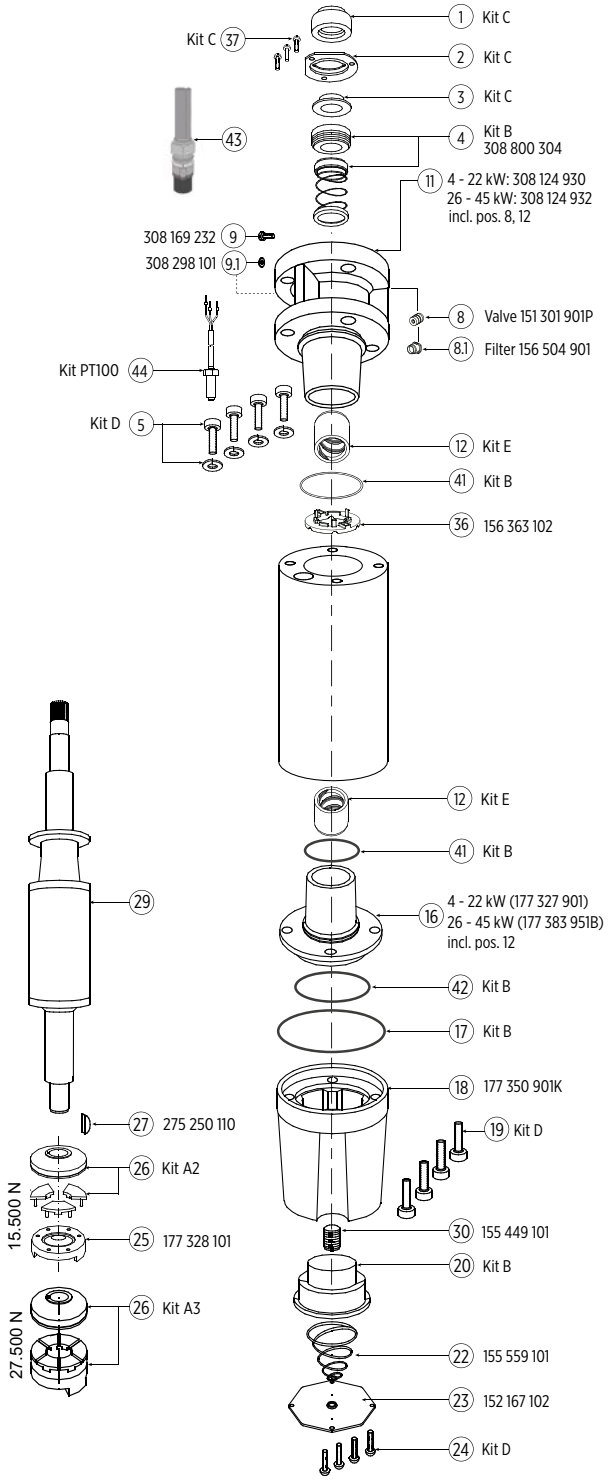

Kit	description	included positions	part no.
Kit A2	Thrust bearing kit | 15500N up to 22 kW	26	308 750 120
Kit A3	Thrust bearing kit | 27500N 26 - 45 kW	26	308 750 120
Kit B1	seal kit	4, 17, 20, 41, 42	308 800 125
Kit C1	slinger kit	1, 2, 3, 37	308 725 101
Kit D1	screw kit	5, 19, 24	308 659 121
Kit E1*	radial bearing kit up to 22 kW	12	308 678 103
Kit E2	radial bearing kit 26 - 45 kW	12	308 678 110
PT100 kit		44	*cf. section*

HIGH EFFICIENCY

6CT PM MOTOR - 3-PHASE - STATOR AND ROTOR | 4-45 KW | WW | 100 HZ

P_N [kW]	U_N [V]	Thrust F [N]	Model no. Motor	Model no. Stator WW	Model no. Rotor WW
4 - 11	380	15500	236 080 9561	327 245 963K	178 130 901K
13 - 22	380	15500	236 084 9561	327 250 963K	178 130 903K
26 - 45	380	27500	236 086 9561	327 257 963K	178 130 905K

6" ENCAPSULATED PERMANENT MAGNET (PM) MOTOR

6CT PM MOTOR - 3-PHASE - MOTOR SPARE PARTS - KITS | 304SS | 316SS

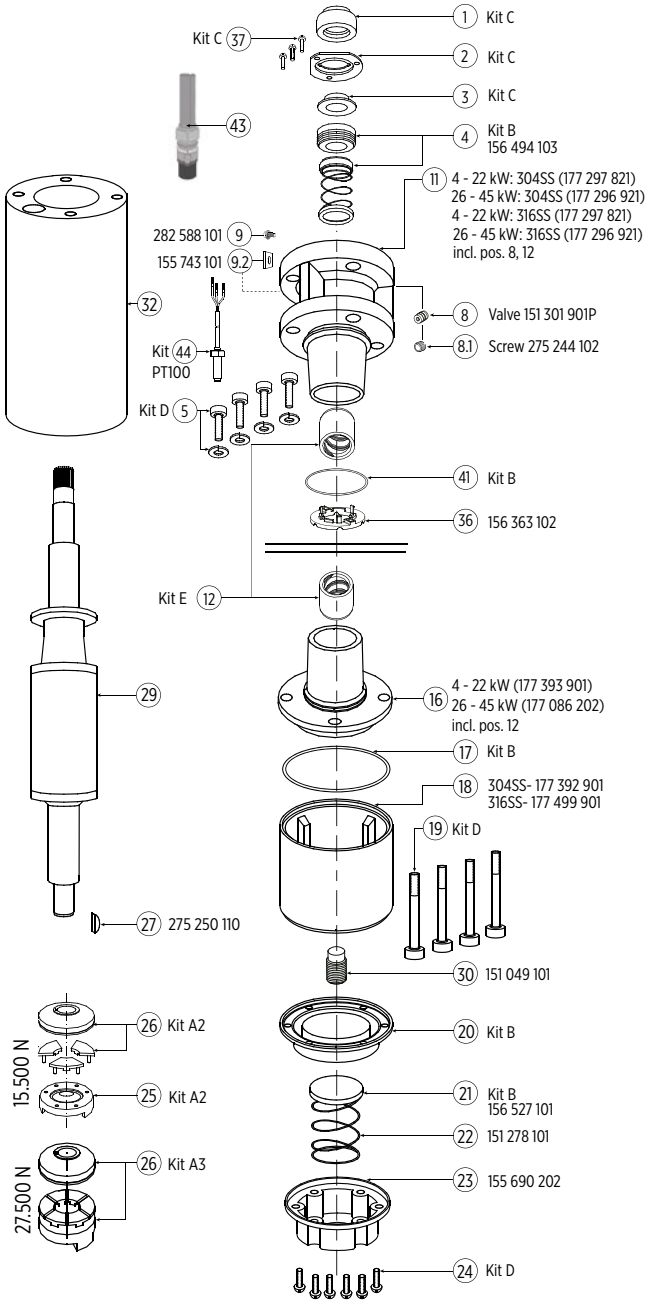

Kit	description	included positions	part no.
Kit A2	Thrust bearing kit | 15500N up to 22 kW	26	308 750 120
Kit A3	Thrust bearing kit | 27500N 26 - 45 kW	26	308 750 200
Kit B3	seal kit	4, 17, 20, 21, 41, 44	308 800 250
Kit C3	slinger kit	1, 2, 3, 37	308 725 150
Kit D5	screw kit	5, 19, 24	308 659 155
Kit E1*	Radial bearing kit up to 22 kW	12	308 678 103
Kit E2	Radial bearing kit 26 - 45 kW	12	308 678 110
PT100 Kit	0	44	*cf. section*

* kit without rotor shaft sleeves, flange replacement bushings are unfinished

6CT PM MOTOR - 3-PHASE - STATOR AND ROTOR | 4-45 KW | 304SS | 316SS | 100 HZ

P_N [kW]	U_N [V]	Thrust F [N]	Motor model no.		Model no. Stator 304SS/316SS	Model no. Rotor 304SS/316SS
			304SS	316SS		
4 - 11	380	15500	236 080 1461	236 080 1561	327 245 983K	178 130 921K
13 - 22	380	15500	236 084 1461	236 084 1561	327 250 983K	178 130 923K
26 - 45	380	27500	236 086 1461	236 086 1561	327 257 983K	178 130 925K