6" REWINDABLE MOTOR

FEATURES & BENEFITS

- NEMA mounting design with metric studs
- Stainless steel splined shaft
- VFD operation up to a rated voltage of 400 V (in compliance with the application guidelines in the motor operating instructions and the VFD manufacturer). For VFD operation with higher voltages, please consult Franklin Electric.
- Factory filled with FES Franklin's non-toxic water soluble fill solution
- Hydrodynamic liquid lubricated radial bearings and High capacity Kingsbury type thrust bearing for 100 % maintenance free operation
- Pressure-equalizing diaphragm, spring pre-loaded
- SandFighter™ sealing system with SIC mechanical seal and sand slinger
- Standard motor in 304SS
- Drinking water approvals

OPTIONS

- Higher-graded material: 316SS, 904L
- Special voltages
- Retrofitable PT 100 temperature sensor
- Special lead lengths up to 50 m
- Motors up to 30 kW with PE2/PA winding insulation (Standard cooling flows, 37 kW: max. 45 °C)

STANDARD SPECIFICATION

- Ratings: 4-37 kW
- Thrust load: 15.5 kN: 4-26 kW; 27.5 kN: 30-37 kW
- Max. storage temperature: - 15 °C to + 60 °C
- Nominal ambient temperature: 50 °C
  with 0.2 m/s cooling flow (4 - 15 kW)
  with 0.5 m/s cooling flow (18.5 - 37 kW)
- Standard voltage: 380 - 415 V (50 Hz), 460 V (60 Hz)
- Voltage tolerance U_N: 50 Hz: -10 % / +6 % UN
  [380 - 415 V = (380 - 10 %) – (415 + 6 %)] 60 Hz: ±10 % UN
- Standard motor with PPC winding insulation
  (37 kW Standard with PE2/PA insulation)
- protection IP68
- Protection requirements: DIN/EN 61947-4-1
- Frequency of starts: 20 starts/ hour
  (with min. 3 minutes resting time),
  equally distributed
- DOL / YΔ-start (pos. of cables 90 °)
- All motors with factory installed leads (4 m)
- Vertical and horizontal operation,
  shaftend heightend
- 37 kW motors may not be installed
  in horizontal position (if required please
  contact Franklin Electric).
- Rotation counter clock wise facing shaft
  end (rotation reversible for 3 phase motors)

SAND FIGHTER | STAINLESS STEEL 304 | STAINLESS STEEL 316 | STAINLESS STEEL 904L

Franklin Electric

6" REWINDABLE MOTOR

Best class winding wires in rewindable motors

The rewindable motors are equipped with best class winding wires. The windings can easily be replaced.
The Franklin motors are factory filled with Franklin's FES non-toxic water soluble fill solution.

NEMA mounting design

YOUTUBE VIDEOS AND TUTORIALS

Tutorial 6REW PT100 installation

Tutorial 8-10REW PT100 installation (sensor design starting 08-2025)

6" REWINDABLE MOTOR

6REW MOTOR - 3-PHASE - MOTOR MODEL NO. | 304SS | 316SS | 904L

P_N [kW]	U_N [V] / f [Hz]	Digit 1 - 6		Digit 7 - 10			
		DOL	YΔ	304SS	316SS	904L	PE2/PA**
4	380 - 415 / 50	262 610	262 710	8611	6611	7611	*7** (ONLY DOL)
	460 / 60	262 610	262 710				
	380/ 60	262 660	262 780				
	230 / 60	262 600	262 700				
5.5	380 - 415 / 50	262 611	262 711	8611	6611	7611	*7** (ONLY DOL)
	460 / 60	262 611	262 711				
	500 / 50	262 511	262 811				
	380/ 60	262 661	262 781				
	230 / 60	262 601	262 701				
7.5	380 - 415 / 50	262 612	262 712	8611	6611	7611	*7** (ONLY DOL)
	460 / 60	262 612	262 712				
	500 / 50	262 512	262 812				
	380/ 60	262 662	262 782				
	230 / 60	262 602	262 702				
9.3	380 - 415 / 50	262 231	262 331	8611	6611	7611	*7** (ONLY DOL)
	460 / 60	262 231	262 331				
	500 / 50	262 271	262 371				
	380/ 60	262 221	262 321				
	230 / 60	262 211	262 311				
11	380 - 415 / 50	262 613	262 713	8611	6611	7611	*7** (ONLY DOL)
	460 / 60	262 613	262 713				
	500 / 50	262 513	262 813				*7**
	380/ 60	262 663	262 783				
	230 / 60	262 603	262 703				
13	380 - 415 / 50	262 232	262 332	8611	6611	7611	*7** (ONLY DOL)
	460 / 60	262 232	262 332				
	500 / 50	262 272	262 372				
	380/ 60	262 222	262 322				*7**
	230 / 60	262 212	262 312				
15	380 - 415 / 50	262 614	262 714	8611	6611	7611	*7**
	460 / 60	262 614	262 714				
	500 / 50	262 514	262 814				
	380/ 60	262 664	262 784				
	230 / 60	262 604	262 704				
18.5	380 - 415 / 50	262 615	262 715	8611	6611	7611	*7**
	460 / 60	262 615	262 715				
	500 / 50	262 515	262 815				
	380/ 60	262 665	262 785				
	230 / 60	262 605	262 705				
22	380 - 415 / 50	262 616	262 716	8611	6611	7611	*7**
	460 / 60	262 615	262 715				
	500 / 50	262 516	262 816				
	380/ 60	262 666	262 786				
	230 / 60	262 606	262 706				
26	380 - 415 / 50	262 233	262 333	8611	6611	7611	*7**
	460 / 60	262 233	262 333				
	500 / 50	262 273	262 373				
	380/ 60	-	262 323				
30	380 - 415 / 50	262 617	262 717	8611	6611	7611	*7**
	460 / 60	262 617	262 717				
	500 / 50	262 517	262 817				
	380/ 60	262 667	262 787				
	230 / 60	-	262 727				
37	381 - 415 / 50	262 618	262 718	8711	6711	7711	Standard
	460 / 60	262 618	262 718				
	501 / 50	262 518	262 818				
	380/ 61	262 668	262 788				
	231 / 60	-	262 728				

Franklin Electric

6" REWINDABLE MOTOR

6REW MOTOR - 3-PHASE - MOTOR PERFORMANCE DATA | 50 HZ

P_N [kW]	Thrust F [N]	U_N [V]	n_N [min^{-1}]	I_N [A]	I_A [A]	η (Eff.) at % load			cos φ (Pf.) at % load			T_N [Nm]	T_A [Nm]
						50	75	100	50	75	100		
4	15500	380	2910	10.4	48	71	75	76	0.59	0.71	0.78	13.1	15.5
		400	2930	10.6	51	68	73	76	0.53	0.65	0.73	13.1	17.3
		415	2930	10.9	53	65	72	76	0.5	0.61	0.69	13	18.8
5.5	15500	380	2860	13.7	48	74	76	75	0.67	0.78	0.83	18.3	15.5
		400	2890	13.3	51	72	76	76	0.62	0.74	0.81	18.2	17.3
		415	2890	13.4	53	71	75	75	0.59	0.71	0.78	18.1	18.8
		500	2890	10.6	41	72	76	76	0.62	0.74	0.81	17	18
7.5	15500	380	2860	18.3	59	77	78	76	0.7	0.8	0.84	25	19.2
		400	2880	17.7	63	75	78	77	0.65	0.76	0.82	24.8	21.5
		415	2890	17.7	65	73	77	77	0.61	0.73	0.8	24.7	23.4
		500	2880	14	50	75	78	77	0.65	0.76	0.82	22	25
9.3	15500	380	2850	22	74	79	80	78	0.71	0.8	0.84	31.1	25.9
		400	2870	21.4	78	78	79	78	0.64	0.76	0.82	31	29
		415	2880	21.2	81	76	79	78	0.6	0.72	0.8	30.9	31.4
		500	2870	17.1	62	78	79	78	0.64	0.76	0.82	29	31
11	15500	380	2860	25.8	93	78	80	78	0.71	0.8	0.85	36.7	31.5
		400	2880	25.2	98	77	80	79	0.65	0.76	0.83	36.4	35.3
		415	2890	25.1	102	75	78	79	0.61	0.73	0.8	36.3	38.2
		500	2880	20	79	77	80	79	0.65	0.76	0.82	35	36
13	15500	380	2880	30.1	118	80	81	80	0.68	0.79	0.84	43.1	45
		400	2900	29.6	125	78	80	80	0.61	0.74	0.81	42.8	50.3
		415	2900	29.7	130	76	79	80	0.57	0.7	0.78	42.7	54.6
		500	2900	23.7	100	78	80	80	0.61	0.74	0.81	50	43
15	15500	380	2880	33.9	140	81	82	81	0.71	0.81	0.85	49.7	53.9
		400	2890	33.1	148	79	81	81	0.65	0.77	0.83	49.4	60.4
		415	2900	33	154	77	80	81	0.6	0.73	0.81	49.3	65.5
		500	2890	26.4	119	79	81	81	0.65	0.77	0.83	60	49
18.5	15500	380	2860	42.3	172	81	82	81	0.68	0.78	0.84	61.7	75.2
		400	2880	42	182	78	81	81	0.61	0.74	0.8	61.2	84.3
		415	2890	42.5	189	76	79	80	0.57	0.7	0.77	61.1	91.3
		500	2880	33.6	146	78	81	81	0.61	0.74	0.8	84	61
22	15500	380	2880	49.1	218	82	84	83	0.68	0.78	0.84	72.6	91.2
		400	2900	49	231	80	82	82	0.61	0.73	0.8	72.5	102.2
		415	2910	49.6	240	77	81	82	0.56	0.69	0.77	72.2	110.7
		500	2900	39.2	185	80	82	82	0.61	0.73	0.8	102	72
26	15500	380	2880	57.5	268	83	84	83	0.68	0.79	0.86	86	120.4
		400	2900	56.7	284	81	83	83	0.61	0.74	0.83	85.6	134.7
		415	2910	57.3	296	78	82	82	0.56	0.69	0.8	85.3	146.1
		500	2900	45.7	227	80	83	83	0.61	0.74	0.81	135	86
30	27500	380	2900	66.4	328	82	84	83	0.67	0.78	0.84	98.8	135
		400	2910	66.4	347	80	83	83	0.6	0.73	0.8	98.4	151
		415	2910	67.5	361	77	81	82	0.55	0.68	0.77	98.2	163
		500	2910	53.2	277	80	83	83	0.6	0.73	0.8	151	98
37	27500	380	2890	82	409	83	84	83	0.67	0.78	0.85	122.1	192.8
		400	2900	81.9	433	80	83	83	0.6	0.72	0.8	121.6	215.8
		415	2910	83.9	450	77	81	82	0.55	0.68	0.76	121.3	234
		500	2900	65.6	346	80	83	83	0.6	0.72	0.8	216	122

6" REWINDABLE MOTOR

6REW MOTOR - 3-PHASE - MOTOR PERFORMANCE DATA | 60 HZ

P_N [kW]	P_{MAX} [kW]	Thrust F [N]	U_N [V]	n_N [min^{-1}]	I_N [A]	I_A [A]	η (Eff.) at % load			cos φ (Pf.) at % load			T_N [Nm]	T_A [Nm]
							50	75	100	50	75	100		
4	4.6	15500	230	3520	21	106	70	75	77	0.52	0.64	0.73	12.5	18.6
			380	3530	13.3	61	66	72	77	0.51	0.63	0.71	12.4	15
			460	3520	10.1	51	70	76	78	0.56	0.67	0.75	12.5	15.3
5.5	6.3	15500	230	3490	26.1	106	74	78	78	0.61	0.73	0.8	17.3	15.9
			380	3480	15.4	61	76	78	78	0.64	0.75	0.81	17.3	15
			460	3480	12.9	51	74	77	77	0.65	0.76	0.82	17.3	15.1
7.5	8.6	15500	230	3490	35.9	146	75	79	79	0.58	0.71	0.78	23.6	22.4
			380	3480	20.8	81	76	79	79	0.64	0.75	0.81	23.6	20.2
			460	3470	17.2	64	75	78	78	0.67	0.77	0.82	23.7	19.4
9.3	10.7	15500	230	3490	44.4	183	75	79	79	0.59	0.71	0.78	29.3	28.9
			380	3470	25.6	100	77	80	80	0.64	0.75	0.81	29.4	25.9
			460	3460	20.8	78	78	80	80	0.67	0.78	0.82	29.4	24.4
11	12.7	15500	230	3490	51.2	220	77	80	81	0.6	0.72	0.79	34.6	35.6
			380	3490	30.3	129	77	81	81	0.62	0.74	0.8	34.5	34.3
			460	3480	25	98	78	81	80	0.68	0.77	0.83	34.7	31.5
13	15	15500	230	3500	62.4	288	76	80	81	0.55	0.68	0.76	40.7	50.5
			380	3500	36.3	164	77	81	82	0.59	0.71	0.78	40.7	47.2
			460	3490	29	125	78	81	81	0.65	0.76	0.82	40.9	43.3
15	17.3	15500	230	3500	65.9	325	80	83	83	0.63	0.74	0.81	47	59.5
			380	3490	39.1	188	81	83	83	0.66	0.77	0.82	47.2	56.5
			460	3490	32.1	151	80	83	83	0.68	0.78	0.84	47.1	55.6
18.5	21.3	15500	230	3490	85.4	402	77	81	82	0.59	0.71	0.78	58.1	81.8
			380	3490	52.5	249	76	80	81	0.58	0.7	0.77	58.1	83.6
			460	3480	40.6	184	80	82	82	0.65	0.76	0.81	58.4	74.5
22	25.3	15500	230	3510	100.2	520	82	84	84	0.65	0.74	0.77	68.8	96.6
			380	3510	59.9	309	82	84	84	0.67	0.75	0.78	68.8	94.9
			460	3500	47.1	232	83	84	84	0.72	0.79	0.82	69.1	85.8
26	29.9	15500	230	3510	118.3	657	83	85	85	0.63	0.72	0.76	81.3	135
			380	3500	67.5	360	83	85	85	0.62	0.74	0.81	81.6	121.4
			460	3500	55.7	287	83	85	85	0.64	0.76	0.84	81.6	117.2
30	34.5	27500	230	3510	135.7	758	78	82	83	0.58	0.71	0.78	93.8	139.6
			380	3510	79.6	436	79	83	84	0.62	0.74	0.81	93.9	132.9
			460	3500	64.4	346	81	84	84	0.64	0.75	0.82	94	126.4
37	42.6	27500	230	3510	169.9	937	77	81	82	0.59	0.71	0.78	115.8	193.6
			380	3510	102.8	567	77	81	82	0.59	0.71	0.78	115.8	193.6
			460	3500	79.1	430	82	84	85	0.63	0.75	0.81	116	177.8

Franklin Electric

6" REWINDABLE MOTOR

6REW MOTOR - 3-PHASE - WINDING RESISTANCE DATA | 380 – 415 V (50 HZ) - 460 V (60 HZ) | PPC

PPC Insulation Standard Windings 380–415 V (50 Hz) | 460 V (60 Hz)

P_N [kW]	model no. Winding kit	Turns per coil	Wire diameter [mm]	Type of Isolation	Group connection	Total Wire length [m]	Resistance coil [Ω]	Resistance YD (U1-U2) [Ω]	Resistance Dol (U1-V1) [Ω]
4	326 364 999	53+53+53+53	0,9 / 1,6	PPC	Serie	540	4.88	5.17	3.5
5.5	326 364 999	53+53+53+53	0,9 / 1,6	PPC	Serie	540	4.88	5.17	3.5
7.5	326 375 999	47+47+47+47	1,0 / 1,7	PPC	Serie	500	3.671	4.04	2.72
9.3	326 374 999	41+41+41+41	1,1 / 1,8	PPC	Serie	466	2.827	3.02	2.06
11	326 373 999	36+36+36+36	1,2 / 1,9	PPC	Serie	436	2.22	2.35	1.606
13	326 372 999	30+30+30+30	1,3 / 2,0	PPC	Serie	400	1.733	1.88	1.243
15	326 366 999	27+27+27+27	1,4 / 2,2	PPC	Serie	395	1.455	1.526	1.016
18.5	326 371 999	23+23+23+23	1,5 / 2,3	PPC	Serie	362	1.161	1.222	0.825
22	326 370 999	19+19+19+19	1,7 / 2,5	PPC	Serie	342	0.852	0.92	0.713
26	326 378 999	16+16+16+16	1,9 /2,7	PPC	Serie	330	0.657	0.698	0.47
30	326 369 999	27+27	1,4 / 2,2	PPC	Parallel	624	0.381	0.61	0.412
37	326 377 999	12+12+12+12	2,0/ 2,9 / 3,1	PE2/PA	Serie	302	0,5420	0,5900	0,3840

6REW MOTOR - 3-PHASE - WINDING RESISTANCE DATA | 380 – 415 V (50 HZ) - 460 V (60 HZ) | PE2/PA

PE2/PA Insulation Standard Windings 380–415 V (50 Hz) | 460 V (60 Hz)

P_N [kW]	model no. Winding kit	Turns per coil	Wire diameter [mm]	Type of Isolation	Group connection	Total Wire length [m]	Resistance coil [Ω]	Resistance YD (U1-U2) [Ω]	Resistance Dol (U1-V1) [Ω]
4	326 461 999	30+30+30+30	1,1 / 2,0	PE2/PA	Serie Y	311	1,8500	-	3,7000
5,5	326 461 999	30+30+30+30	1,1 / 2,0	PE2/PA	Serie Y	311	1,8500	-	3,7000
7,5	326 428 999	27+27+27+27	1,3 / 2,2	PE2/PA	Serie Y	295	1,2480	-	2,4960
9,3	326 429 999	23+24+24+23	1,4 / 2,4	PE2/PA	Serie Y	274	1,0060	-	2,3200
11	326 430 999	20+21+21+20	1,4 / 2,4	PE2/PA	Serie Y	255	0,9280	-	1,8560
13	326 431 999	17+18+18+17	1,6 / 2,6	PE2/PA	Serie Y	240	0,6670	-	1,3340
15	326 432 999	27+27+27+27	1,3 / 2,2	PE2/PA	Serie	395	1,6870	1,6870	1,2466
18,5	326 433 999	23+23+23+23	1,3 / 2,2	PE2/PA	Serie	362	1,5500	1,5500	1,0333
22	326 434 999	19+19+19+19	1,5 / 2,5	PE2/PA	Serie	342	1,0940	1,0940	0,7293
26	326 435 999	16+16+16+16	1,7 / 2,7	PE2/PA	Serie	330	0,8210	0,8210	0,5473
30	326 436 999	27+27	1,3 / 2,2	PE2/PA	Parallel	624	1,3260	0,6630	0,4420
37	326 377 999	12+12+12+12	2,0/ 2,9 / 3,1	PE2/PA	Serie	302	0,5420	0,5900	0,3840

6REW MOTOR - 3-PHASE - INSULATION RESISTANCE DATA | 20 °C | 500 VDC

Insulation resistance (20 °C / 500 VDC)		
new motor without drop cable	400 >	MΩ
used motor without drop cable	20 >	MΩ
new motor with drop cable	4 >	MΩ
used motor with drop cable	1	MΩ

6REW MOTOR - 3-PHASE - REPAIR INSTRUCTIONS

Pictured motor repair instruction		
material	motor design	model no.
WW	motor design up to 12-2012	308 018 460
316SS | 904L		308 018 ***
304SS | 316SS | 904L	motor design starting 01-2013	308 018 607

6" REWINDABLE MOTOR

6REW MOTOR - 3-PHASE - MATERIALS | WW | 316SS | 904L

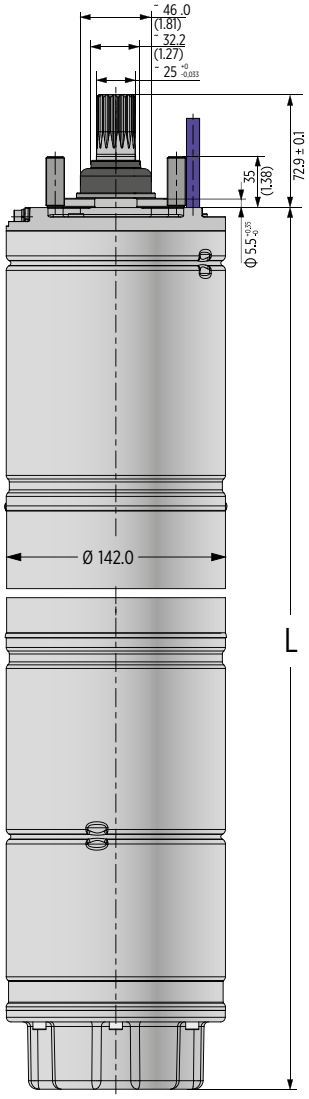

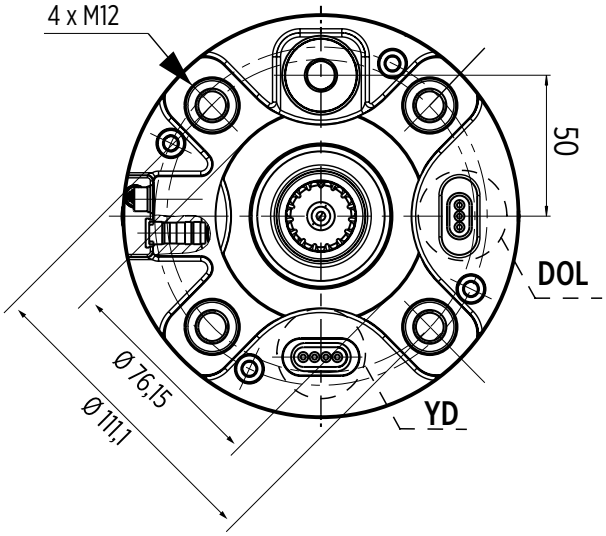

part	WW	316SS	904L
shaft end gear	1.4462	1.4462	1.4462
Slinger	EPDM	EPDM	EPDM
Seal	SiC/SiC	SiC/SiC	SiC/SiC
End bell, NEMA	1.4308	1.4408	1.4539
Stator Shell	1.4301	1.4571	1.4539
Diaphragm	EPDM	EPDM	EPDM
Diaphragm Cover	1.4301	1.4404	1.4539

6REW MOTOR - 3-PHASE - DIMENSIONS AND WEIGHTS | 304SS | 316SS | 904L

P_N [kW]	motor length 304SS / 316SS /904L	motor weight [kg] 304SS / 316SS /904L		motor shipping size [mm]		
	L [mm]	motor	incl. package	B [mm]	H [mm]	L [mm]
4	679	43	49	158	316	908
5.5	679	43	49			
7.5	699	45	51			
9.3	729	49	55			
11	759	53	59			
13	809	57	64	158	316	1138
15	854	61	68			
18.5	899	66	73			
22	989	77	84			
26	1094	88	97	158	316	1438
30	1194	98	107			
37	1274	105	114			

Franklin Electric

6" REWINDABLE MOTOR

6REW MOTOR - 3-PHASE - CONNECTIONS

DOL	DOL II	YΔ
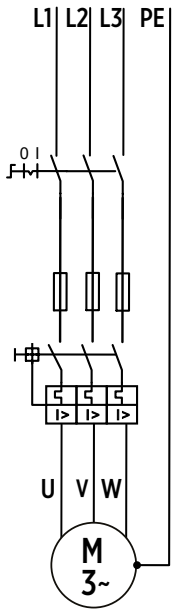	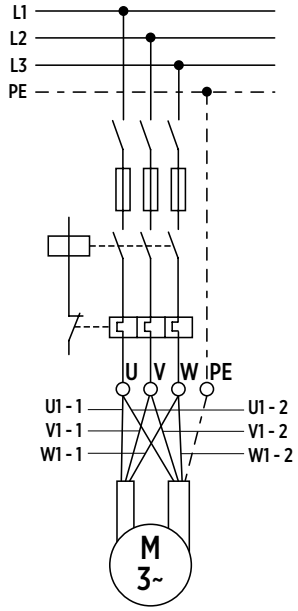	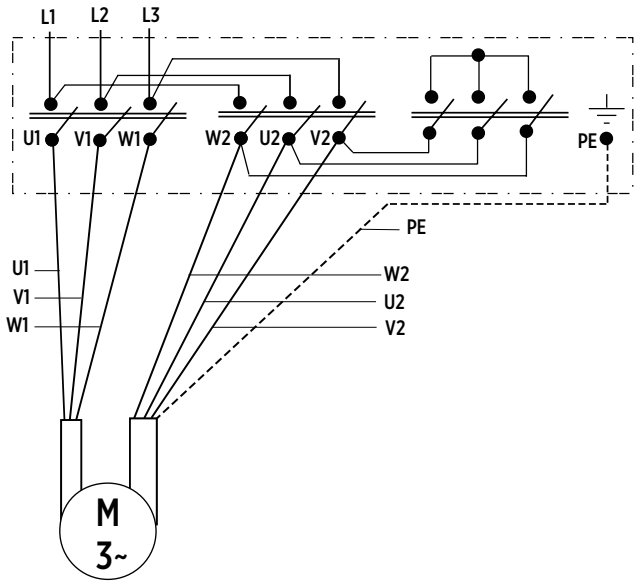

U = black (BK) | W = brown (BN) | V = grey (GY) | PE = yellow/green (YE/GN)

6" REWINDABLE MOTOR

6REW MOTOR - 3-PHASE - MOTOR LEADS | WW | 316SS | 904L | DOL

DOL	P_N [kW]	qty.	Ø [mm²]	H x W [mm]	length [m]	model no.	lead seal kit
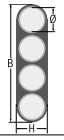	4 - 13	1	4G2,5	7,0 x 19,0	4	308 710 100	308 660 811
	15 - 22	1	4G4	8,2 x 23,0	4	308 710 101	308 660 812
	26 - 37	1	4G6	9,0 x 25,0	4	308 710 103	308 660 813

6REW MOTOR - 3-PHASE - MOTOR LEADS | WW | 316SS | 904L | YΔ

YΔ	P_N [kW]	qty.	Ø [mm²]	H x W [mm]	length [m]	model no.	lead seal kit
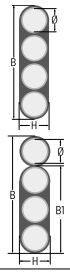	4 - 22	1	3X2,5	7,3 x 15,3	4	308 710 104	308 660 816
		1	4G2,5	7,0 x 19,0	4		
	26 - 30	1	3X4	8,5 x 17,8	4	308 710 105	308 660 817
		1	4G4	8,2 x 23,0	4		
	37	1	3X4	8,5 x 17,8	4	308 710 106	308 660 817
		1	4G4	8,2 x 23,0	4		

For PE2/PA motors, the special tape 700 541 688 is also required.
Cables are designed for submerged operation. For air operation, please consult Franklin Electric.

6REW MOTOR - 3-PHASE - GROUND LEADS | 304SS | 316SS

	P_N [kW]	Ø [mm²]	size [mm]	type	qty.	L [m]	model no.
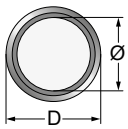	all ratings	1G10 mm²	D 6,1 mm (±0,3)	VDE/KTW	1	4	308 055 040

6REW MOTOR - 3-PHASE - LEAD OPENING SEAL KIT

lead opening seal kit	motors starting 08/2017
4 - 37 kW DOL / YΔ	308 660 815

Franklin Electric

6" REWINDABLE MOTOR

6REW MOTOR - 3-PHASE - DERATING CURVES

De-rating of 6" rewindable motors | 4-15 kW

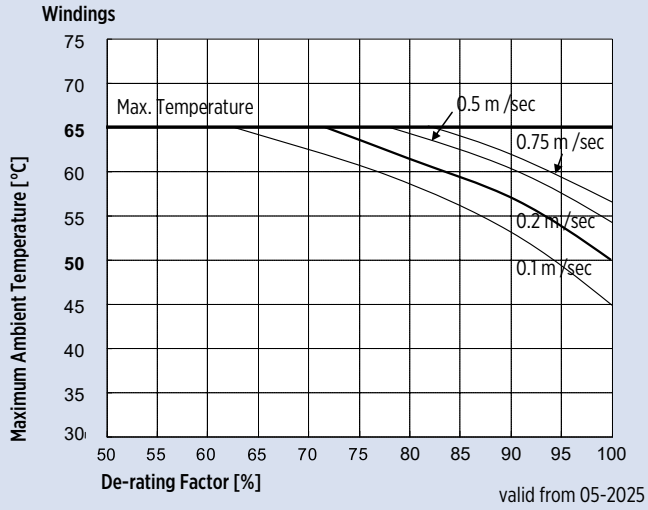

De-rating of 6" rewindable motors | 18,5-30 kW

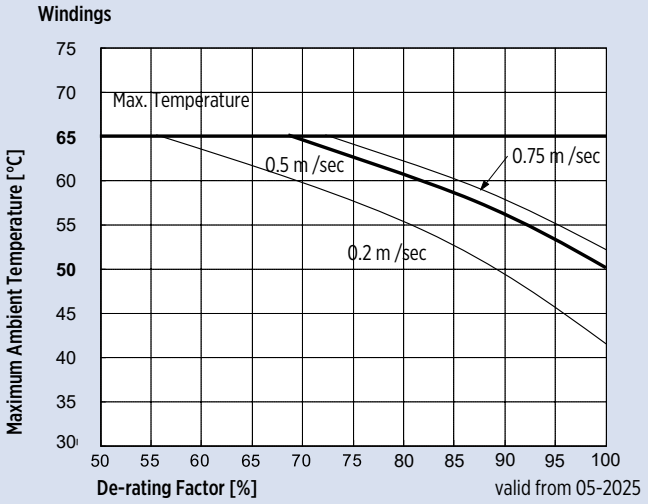

De-rating of 6" rewindable motors | 37 kW

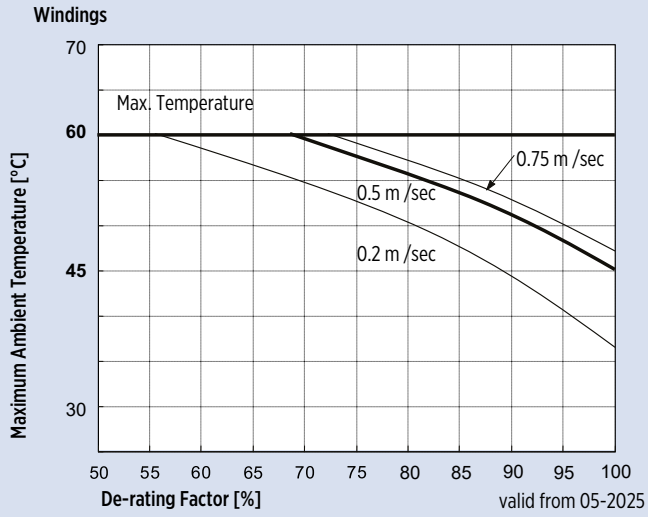

If these conditions are not met please contact Franklin Electric.

6" REWINDABLE MOTOR

6REW MOTOR - 3-PHASE - MOTOR SPARE PARTS - KITS | WW | 316SS | 904L

Kit	description	included positions	part no.
Kit 1	thrust bearing kit | 4-26 kW	17, 25, 26, 27, 36	308 750 301
	thrust bearing kit | 30-37 kW	17, 25, 26, 27, 36	308 750 302
Kit 2	radial bearing kit | 4-26 kW	12, 28	308 750 401
	radial bearing kit | 30-37 kW	12, 28	308 750 402
Kit 3A	seal kit Standard	1, 4, 6.1, 15, 17, 20, 34, 42.1, 43	308 800 422
Kit 3B	seal Kit Viton	1, 4, 6.1, 15, 17, 20, 34, 42.1, 43	308 800 424
Kit 4	screw kit 304SS / 316SS	5, 5.1, 6, 6.1, 9, 13, 15, 24, 42, 42.1	308 659 325
	screw kit 904L	5, 6, 6.1, 9, 13, 15, 24, 42, 42.1	308 659 326
Kit 5	valve kit	8, 10	308 800 423
Kit 6	lead seal kit	7, 6.1, 42	*cf. section*
Kit 7	PT100 kit	35	*cf. section*

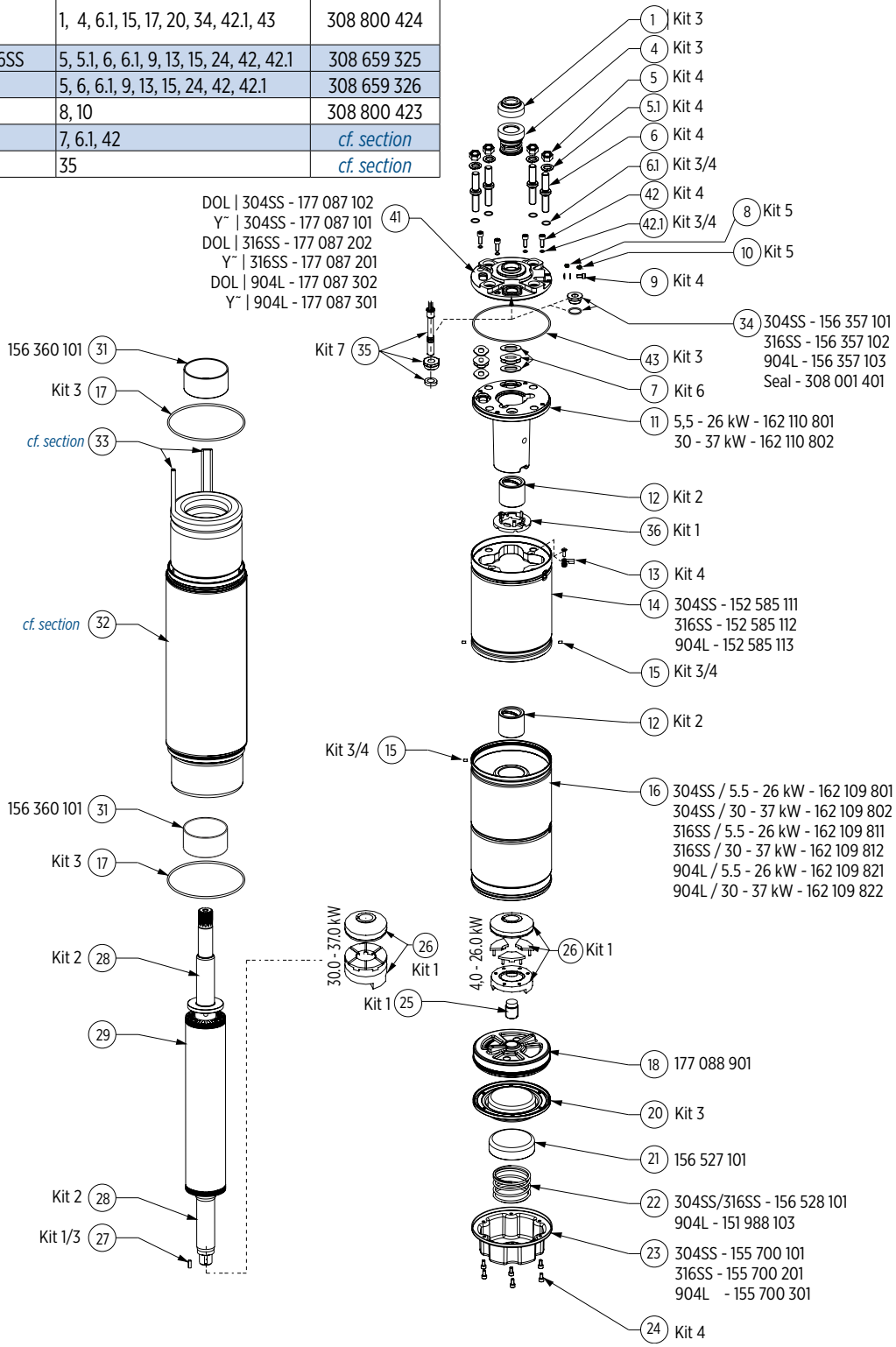

Franklin Electric

6" REWINDABLE MOTOR

6REW MOTOR - 3-PHASE - STATOR AND ROTOR | 304SS

P_N [kW]	stator (incl. winding and 4 m motor lead)				rotor
	DOL 304SS		YΔ 304SS		
	PPC	PE2/PA	PPC	PE2/PA	
4	326 364 811	326 461 811	326 364 861		161 177 801K
5,5	326 364 811	326 461 811	326 364 861		161 177 801K
7,5	326 375 811	326 428 811	326 375 861		161 177 802K
9,3	326 374 811	326 429 811	326 374 861		161 177 803K
11	326 373 811	326 430 811	326 373 861		161 177 804K
13	326 372 811	326 431 811	326 372 861		161 177 805K
15	326 366 811	326 432 811	326 366 861	326 432 861	161 177 806K
18,5	326 371 811	326 433 811	326 371 861	326 433 861	161 177 807K
22	326 370 811	326 434 811	326 370 861	326 434 861	161 176 804K
26	326 378 811	326 435 811	326 378 861	326 435 861	161 176 803K
30	326 369 811	326 436 811	326 369 861	326 436 861	161 176 802K
37		326 377 811		326 377 861	161 176 801K

6REW MOTOR - 3-PHASE - STATOR AND ROTOR | 316SS

P_N [kW]	stator (incl. winding and 4 m motor lead)				rotor
	DOL 316SS		YΔ 316SS		
	PPC	PE2/PA	PPC	PE2/PA	
4	326 364 821	326 461 821	326 364 871		161 177 801K
5,5	326 364 821	326 461 821	326 364 871		161 177 801K
7,5	326 375 821	326 428 821	326 375 871		161 177 802K
9,3	326 374 821	326 429 821	326 374 871		161 177 803K
11	326 373 821	326 430 821	326 373 871		161 177 804K
13	326 372 821	326 431 821	326 372 871		161 177 805K
15	326 366 821	326 432 821	326 366 871	326 432 871	161 177 806K
18,5	326 371 821	326 433 821	326 371 871	326 433 871	161 177 807K
22	326 370 821	326 434 821	326 370 871	326 434 871	161 176 804K
26	326 378 821	326 435 821	326 378 871	326 435 871	161 176 803K
30	326 369 821	326 436 821	326 369 871	326 436 871	161 176 802K
37		326 377 821		326 377 871	161 176 801K

6REW MOTOR - 3-PHASE - STATOR AND ROTOR | 904L

P_N [kW]	stator (incl. winding and 4 m motor lead)				rotor
	DOL 904L		YΔ 904L		
	PPC	PE2/PA	PPC	PE2/PA	
4	326 364 831	326 461 831	326 364 881		161 177 801K
5,5	326 364 831	326 461 831	326 364 881		161 177 801K
7,5	326 375 831	326 428 831	326 375 881		161 177 802K
9,3	326 374 831	326 429 831	326 374 881		161 177 803K
11	326 373 831	326 430 831	326 373 881		161 177 804K
13	326 372 831	326 431 831	326 372 881		161 177 805K
15	326 366 831	326 432 831	326 366 881	326 432 881	161 177 806K
18,5	326 371 831	326 433 831	326 371 881	326 433 881	161 177 807K
22	326 370 831	326 434 831	326 370 881	326 434 881	161 176 804K
26	326 378 831	326 435 831	326 378 881	326 435 881	161 176 803K
30	326 369 831	326 436 831	326 369 881	326 436 881	161 176 802K
37		326 377 831		326 377 881	161 176 801K