MOTOR/PUMP-COUPLINGS

Couplings are designed to transmit the pump thrust to the motor in order to provide maximum benefits from the Franklin internal thrust bearing construction.

- Hardened Stainless-steel spacer discs in the 4″ and 6″ couplings assure positive bearing between motor and pump shafts and assure full support for downward thrust created by the pump. (8″ couplings DO NOT contain hardened spacer discs, since the motor shaft itself is hardened.)
- Material: 304SS / 316SS
- NEMA standard measuring on motor shaft
- Separate washer between motor and pump shafts

8″ Motor/Pump-Couplings

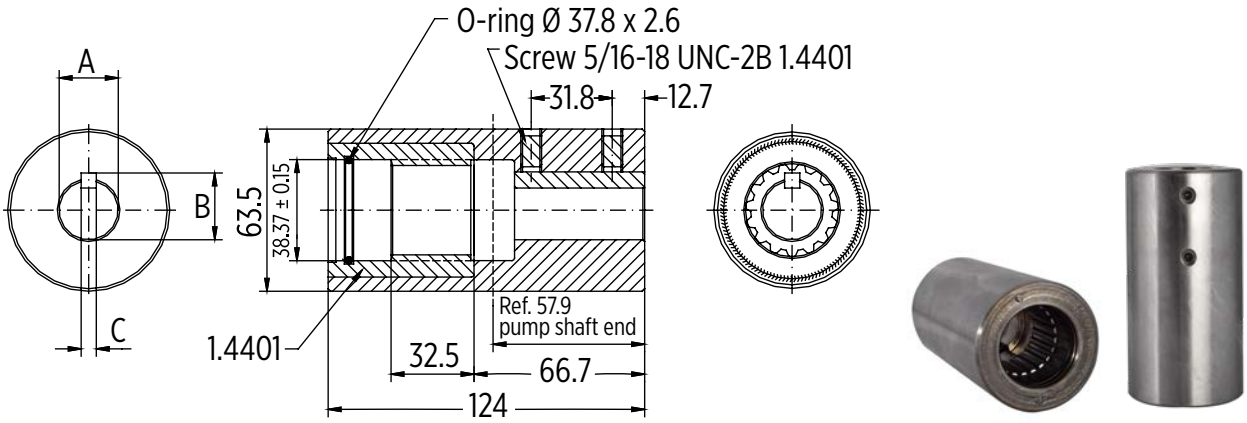

model no.	coupling material DIN (AISI)	Dimensions A [mm] Max./Min.	Dimensions B [mm] Max./Min.	Dimensions C [mm] Max./Min.
156 563 901	1.4005 (304SS)	25.425 / 25.413	28.27 / 28.17	6.38 / 6.32
156 563 921	1.4404 (316SS)			
156 563 902	1.4005 (304SS)	30.188 / 30.175	33.73 / 33.63	7.96 / 7.91
156 563 922	1.4404 (316SS)			
156 563 903	1.4005 (304SS)	31.775 / 31.763	35.36 / 35.26	7.96 / 7.91
156 563 923	1.4404 (316SS)	38.125 / 38.113		
156 563 904	1.4005 (304SS)	38.125 / 38.113	42.37 / 42.27	9.55 / 9.50
156 563 924	1.4404 (316SS)	38.125 / 38.113		
156 563 905	1.4005 (304SS)	19.085 / 19.063	20.70 / 20.52	4.84 / 4.79
156 563 906	1.4005 (304SS)	30.188 / 30.175	33.02 / 32.92	6.38 / 6.32
156 563 926	1.4404 (316SS)	30.188 / 30.175	33.02 / 32.92	6.38 / 6.32
156 563 907	1.4005 (304SS)	22.250 / 22.238	24.54 / 24.36	6.43 / 6.38
156 563 908	1.4005 (304SS)	22.024 / 22.011	25.53 / 25.32	8.03 / 7.98
156 563 931	1.4404 (316SS)			
156 563 929	1.4404 (316SS)	42.888 / 42.850	47.12 / 47.04	9.55 / 9.50

Franklin Electric

MOTOR/PUMP-COUPLINGS

4″ Motor/Pump-Couplings

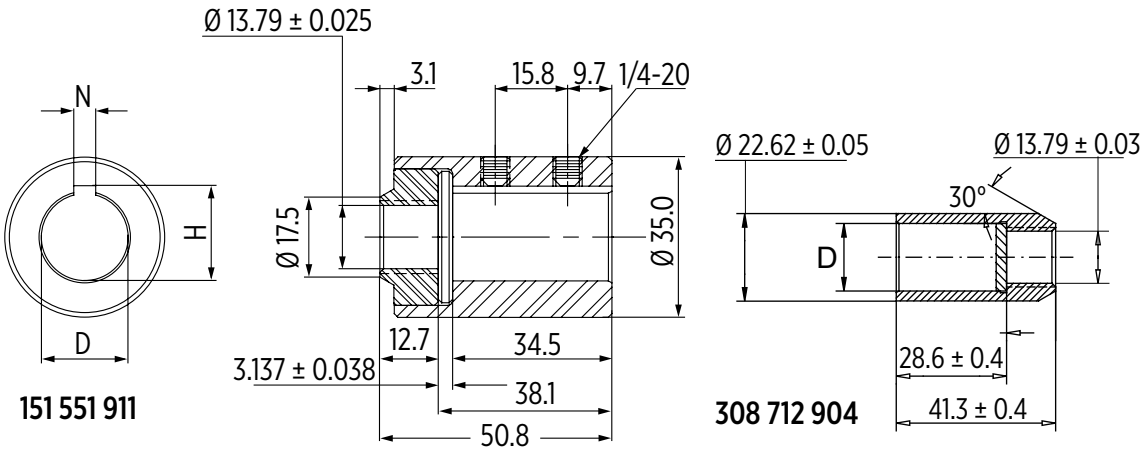

model no.	coupling material DIN (AISI)	Dimensions D [mm] Max./Min.	Dimensions N [mm] Max./Min.	Dimensions H [mm] Max./Min.
151 551 911	304SS	19.075 / 19.063	4.838 / 4.788	20.70 / 20.53
308 712 904	316SS	17.50 / 17.48		

6″ Motor/Pump-Couplings

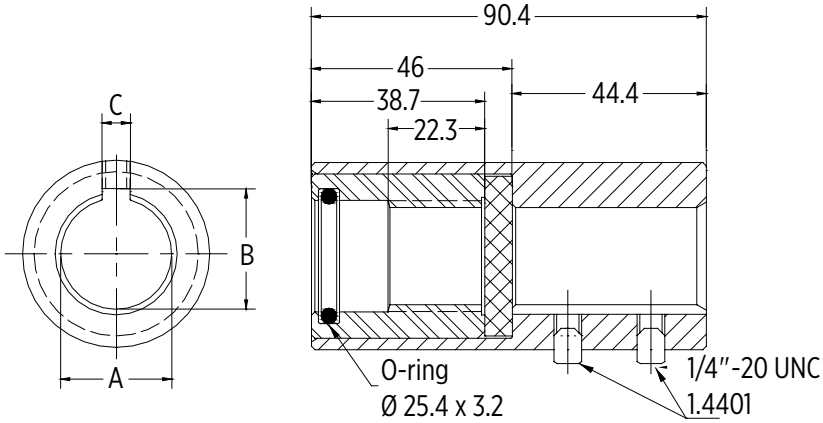

model no.	coupling materialDIN (AISI)	Dimensions A [mm] Max./Min.	Dimensions B [mm] Max./Min.	Dimensions C [mm] Max./Min.	Dimensions D [mm]
151 935 902	1.4005 (304SS)	19,07 / 19,06	20,70 / 20,52	4,84 / 4,79	43
151 935 922	1.4401 (316SS)				
151 935 910	1.4005 (304SS)	20,02/ 20,01	22,76 / 22,60	6,05 / 6,00	43
151 935 927	1.4401 (316SS)				
151 935 908	1.4005 (304SS)	22,02/ 22,01	25,53 / 25,32	8,03 / 7,98	43
151 935 928	1.4401 (316SS)				
151 935 901	1.4005 (304SS)	22,25 / 22,24	24,54 / 24,36	6,43 / 6,38	43
151 935 921	1.4401 (316SS)				
151 935 906	1.4005 (304SS)	25,02 / 25,01	28,70 / 28,30	8,03 / 7,98	43
151 935 926	1.4401 (316SS)				
151 935 909	1.4005 (304SS)	25,42 / 25,41	27,74 / 27,56	6,43 / 6,38	43
151 935 929	1.4401 (316SS)				

PUMP CONNECTION SCREW KITS

Pump connection screw kits for 6" / 8" encapsulated motors and 8"/10"/12" rewindable motors

motor type	Material	L / L_T [mm]	Thread type	F [mm]	model no.
6" CT	316SS	38.1	1/2-20UNF	19	308 659 318
8" CT / 8" REW	316SS	70	M16	24	308 659 327
10" / 12" REW	316SS	80	M20	30	308 659 319

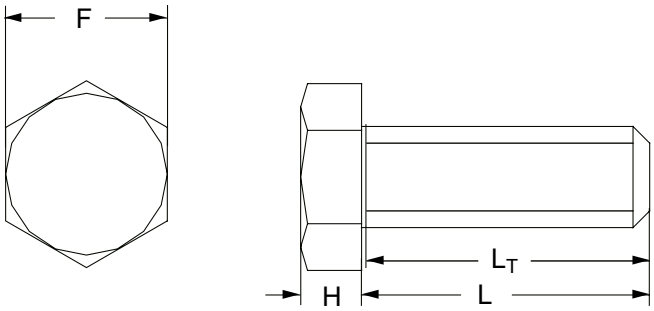

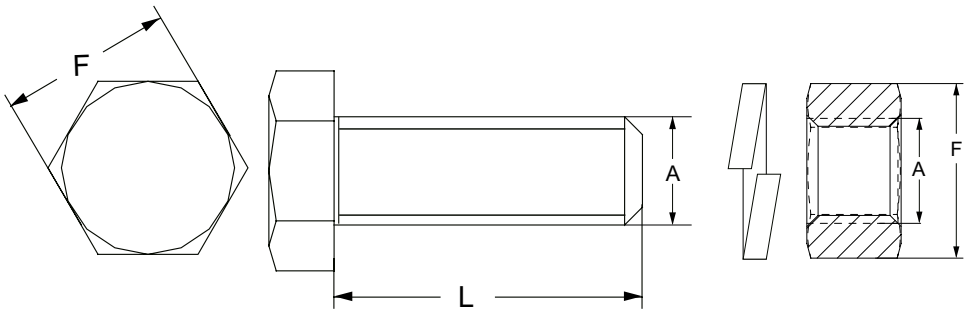

MOTOR LEADS ACCESSORIES

Double plug lead for 4" Termination kit

Required for use of lead termination kits. Connection between termination kit and 4" motor.

- Max. current: 18 Ampere in air at max. 50 °C ambient temperature
- Max. current: 23 Ampere submersed in water at max. 30 °C ambient temperature
- Max. Voltage: 750 V AC
- PSC / 2-wire / 3-wire motors and 3 ~ motors
- with or without strain relief
- KTW approval

2- wire Motors				PSC / 3-wire/ 3-phase motor			
Model No.	Material	Description		Model No.	Material	description	
310 131 001	304SS	3x 1.5 mm²	1,50 m without strain relief	310 111 401	304SS	3x1.5 / 1G 1.5 mm²	1,50 m without strain relief
310 131 002	304SS	3x 1.5 mm²	1,50 m without strain relief	310 111 402	304SS	3x1.5 / 1G 1.5 mm²	2,50 m without strain relief
310 132 001	304SS	3x 1.5 mm²	1,50 m with strain relief (brass)	310 112 001	304SS	3x1.5 / 1G 1.5 mm²	1,50 m with strain relief (brass)
310 132 002	304SS	3x 1.5 mm²	2,50 m with strain relief (brass)	310 112 002	304SS	3x1.5 / 1G 1.5 mm²	2,50 m with strain relief (brass)

4" Motor Design with round lead plug 9.3 kW

Lead length [m]	Material	Model No.	Description	
1.5	316SS	309 116 501	3x 1.5 | 1G 1.5mm²	1,50 m without strain relief
2.5	316SS	309 116 502	3x 1.5 | 1G 1.5mm²	1,50 m without strain relief

Termination Kit for 4" motors

This proven, sturdy solution is your choice of cable splicing in temporary pump applications or when reusing drop cable. The flexibility and safety it provides for under field service conditions makes it the preferred choice over conventional, not breakable splicing kits.

- For PSC / 2-wire / 3-wire motors and 3~ motors
- Max. current 18 Ampere in air at max. 50 °C ambient temperature
- Max. current 23 Ampere submersed in water at max. 30 °C ambient temperature
- Max. voltage: 750 V
- Optional strain relief
- Cable plug in 304SS

Kit-Type	model no.	description
Standard 304SS	308 090 901	without strain relief
Strain Relief 304SS	308 090 902	with strain relief

MOTOR LEADS ACCESSORIES

Lead splicing kit 1.5 - 25 mm²

This kit allows the connection of a motor short cable with an extension cable in the range up to 25 mm².

- Suitable for all common cable materials
- Long durability
- High electrical insulation values and mechanical strength
- Quick and easy assembly
- 4 wire
- up to 1.2 kV
- Components: Transparent plastic shell, Ready-to-mix cast resin, insulation tape, assembly instruction

model no.	description	for cross-sections up to [mm²]	L [mm]	Ø [mm]	H [mm]	Max. cable Ø [mm]
308 090 930	splicing kit 10	1,5 - 10	190	36	50	26
308 090 931	splicing kit 25	10 - 25	260	47	63	34

Franklin Electric

PT100 TEMPERATURE SENSORS

The PT100 is a precision platinum wire resistor that is specified occasionally as a temperature input for process control equipment. A jacketed control lead must be run from the PT100 lead to the above-ground equipment.

- Easy, quick and secure installation
- Shielded cable (can be installed close to the motor cable)
- Quick and easy to replace
- The enclosed adaptor screw only needed for installation in 6″ and 8″ encapsulated standard and permanent magnet motors is now separated from the PT100 sensor allowing for an easy, quick and secure installation.

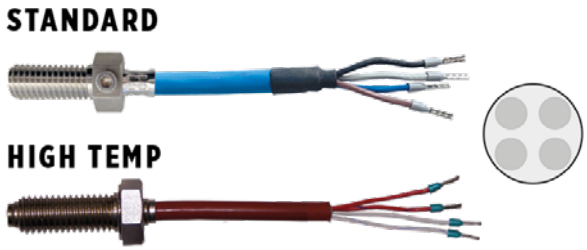

- The PT100 is not a motor overload protector, which means the warranty will be voided if a separate motor protector is not installed as required by the Franklin Electric Application Installation Maintenance Manual (AIM).
- To install the PT100 sensor bolt, remove the top end bell bolt that is opposite of the lead and replace it with the PT100 screw. Tighten the sensor bolt to the torque values shown below. PT100 sensor retrofit kits from Franklin Electric come with complete instructions and allow easy field installation.

PT100 sensor for encapsulated motors (Standard / PM)

The PT100 is a precision platinum wire resistor that is specifi as a temperature input for process control equipment. The sensor is inserted in a adapter screw and is equipped with a 10 m / 20 m / 30 m or 50 m cable.

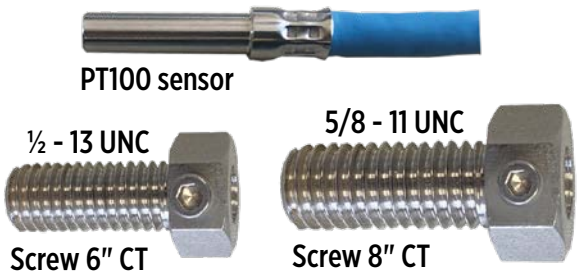

Tightening torque PT 100 screw

[mm]	Sensor type	[kW]	[kW]	[Nm]
19	6″ PT100	4 - 45	54 - 61	54 - 61
24	8″ PT100	30 - 45	54 - 61	54 - 61
		55 - 150	115 - 122	115 - 122

Tightening torque PT 100 Inbus-screw M4

[mm]	[Nm]
3	3 - 4

Standard Motors setting values PT100 controller

Conditions	Water temperature without motor operation	Max. Trip temp./ Resistance setting (for standard lead lengths)
Motor operating at nameplate output with 0.16 m/sec flow past the motor	10 °C	40 °C / 115,5 Ω
	15 °C	44 °C / 117,0 Ω
	20 °C	48 °C / 118,6 Ω
	25 °C	51 °C / 119,7 Ω
	30 °C	55 °C / 121,3 Ω
Motor that has been derated with 1 m/sec flow past the motor	35 °C	59 °C / 122,8 Ω
	40 °C	63 °C / 124,3 Ω
	45 °C	66 °C / 125,5 Ω
	50 °C	70 °C / 127,0 Ω
	55 °C	74 °C / 128,6 Ω
	60 °C	78 °C / 130,1 Ω

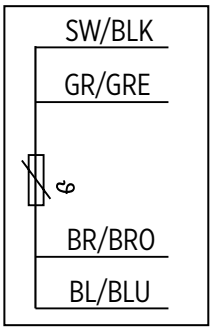

Trip Points:
PVC = 55 °C
PE2/PA = 75 °C

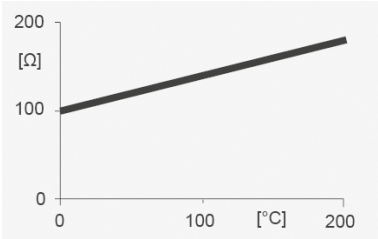

PT 100 sensor- 6″ CT PM motor settings

6″ CT PM motor rating [kW]	Maximum Ambient Temperature [°C]	Cooling flow along the motor [m/s]	Max. Trip temp./ Resistance setting (for standard lead lengths)
11	30	0.2	47 °C / 121,3 Ω
22	30	0.2	47 °C / 121,3 Ω
45	30	0.5	47 °C / 121,3 Ω

PT100 TEMPERATURE SENSORS

PT100 Sensor Kit numbers - 6″ CT Standard and PM Motors

Kit no.	lead length [m]	motor type	wire insulation	screw material	Max. medium temperature [°C]	Lead Ø [mm²]	D [mm]
305 327 951	10	6″ all Ratings	Rubber, shielded	A4	Standard Motors - 60°C PM Motors - 30°C	4X0,5	8
305 327 952	20						
305 327 953	30						
305 327 954	50						

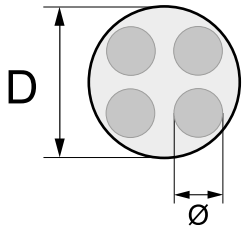

PT100 Sensor Kit numbers - 8″ CT Standard and PM Motors

Kit no.	lead length [m]	motor type	wire insulation	screw material	Max. medium temperature [°C]	Lead Ø [mm²]	D [mm]
305 326 951	10	6″ all Ratings	Rubber, shielded	A4	60 °C	4X0,5	7
305 326 952	20						
305 326 953	30						
305 326 954	50						

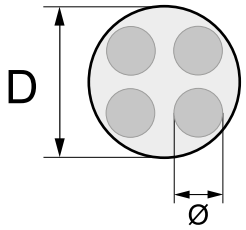

PT100 for encapsulated HighTemp motors

It's ohmic resistance is proportional to the sensed temperature. The FE field replaceable PT100 is potted into a screw holding the upper end bell. Because of his remote position relative to the windings, the sensing relay should be adjusted according to the below table.

Tightening torque PT 100 screw

Sensor type	[kW]	[Nm]
6″ PT100	4 - 45	54 - 61
8″ PT100	30 - 110	115 - 122

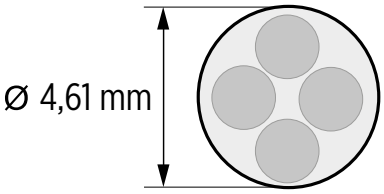

Conditions	Water temperature without motor operation	Max. Trip temp. / Resistance setting
Motor operating at nameplate output with 0.16 m/sec flow past the motor	50 °C	60 °C
	60 °C	70 °C
	70 °C	80 °C
	75 °C	85 °C
	80 °C	90 °C
	90 °C	100 °C

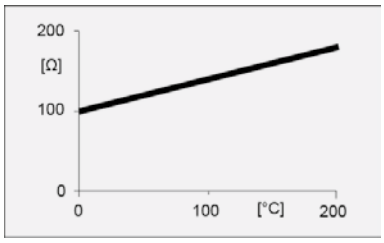

6″ CT HighTemp 90°C Motors

Kit no.	motor type	wire insulation	screw material	Max. medium temperature [°C]	Lead Ø [mm²]	lead length [m]
156 098 111K	4 - 30 kW	Silicon	14571	90°C	4X0,35	10
156 098 112K		Silicon	14571	90°C	4X0,35	130

6″ CT HighTemp 75°C Motors

Kit no.	motor type	wire insulation	screw material	Max. medium temperature [°C]	Lead Ø [mm²]	lead length [m]
156 098 116K	30 - 110 kW (Type 1)	Silicon	14571	90°C	4X0,35	10
156 098 117K		Silicon	14571	90°C	4X0,35	130

PT100 connection

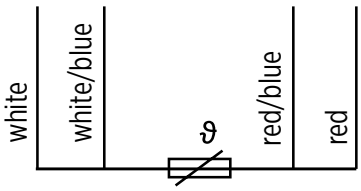

PT100 TEMPERATURE SENSORS

PT100 sensor for rewindable motors

- Continuous monitoring of the temperature of the filling liquid above the winding head
- Fitted into the upper end bell flange, all 6"/8"/10"/12" Std. rewindable motors are prepared for the PT100 installation
- Measurement of the temperature of the filling liquid
- Conductor with a resistance proportional to the temperature

(The above-ground equipment is not available from Franklin Electric and is typically part of a custom panel or data acquisition system.)

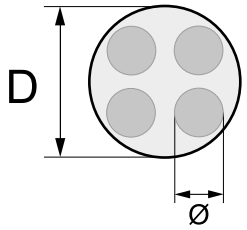

lead length [m]	motor type [6" - 12"]	model no.	Ø [mm²]	D [mm]	Setting Temperature	
					Standard motors	PM motors
10	WW/304SS/316SS	308016601	4X0,5	8	PPC = 75 °C PE2/PA = 75°C	8" REW PM motors: 55 °C 10" REW PM motors: 65 °C
	904L	308016701				
20	WW/304SS/316SS	308016602	4X0,5	8		
	904L	308016702				
30	WW/304SS/316SS	308016603	4X0,5	8		
	904L	308016703				
40	WW/304SS/316SS	308016604	4X0,5	8		
	904L	308016704				
50	WW/304SS/316SS	308016605	4X0,5	8		
	904L	308016705				

MOTOR ACCESSORIES

Corrosion Protection 4"

For use in more aggressive media
- Mounting on the bottom of the motors
- Material: GG 25

System of operation: Wells with extremely high levels of chlorides and other elements combined with high temperatures will attack almost any type of metal, including Stainless-steel. When in contact with a more noble metal, the less noble metal becomes the anode of a galvanic cell. Oxidation occurs at the anode. It slowly dissolves (sacrificial anode), leaving the more noble metal unaffected. The result is a longer service life of the motor/pump unit in more aggressive media.

4000N 6500N

Thrust F	part no.
4000N	308 250 914
6500N	308 250 913

Motor filling liquid

5 litre container with FES 92 to mix the required filling version (FES91 / FES93 / FES92).

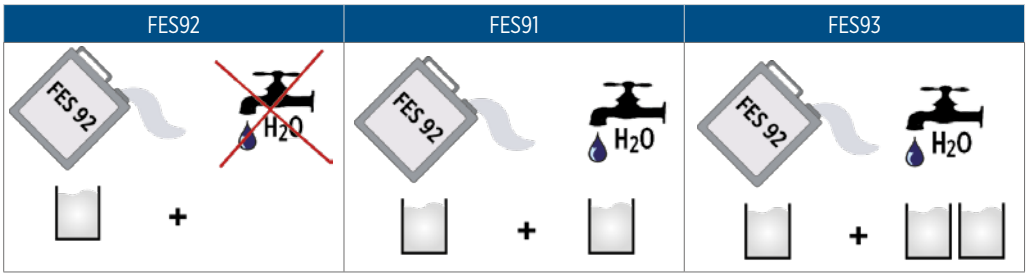

part no.
308 353 941

motor type	required motor filling
4" encapsulated Standard / PM motor	FES93
6" encapsulated Standard / PM motor	FES91
6" encapsulated High Temp 90 °C motor	FES92

motor type	required motor filling
8" encapsulated Standard motor	FES91
8" encapsulated High Temp 75 °C motor	FES92
6"/8"/10"/12" rewindable Standard / PM motor	FES93

Motor Filling tool kit

This kit contains all necessary tools to check and replenish Franklin Electric submersible motors with FES91, FES92 or FES93 filling liquid.
(fill solution/concentrate must be ordered separately.)

part no.
308 726 103

MOTOR ACCESSORIES

DC Disconnect

To disconnect the drive even under load safely from the solar generator, Franklin Electric offers suitable DC disconnect switches for different power ratings.

	part no.
0 - 11A/800 V DC	308 170 313
12 - 22A/800 V DC	308 170 325
25A/800V DC	308 170 325

Surge Arrestors

Surge arresters protect the submersible motor from a variety of commonly occurring high voltage spikes, which can permanently damage the insulation system and thus cause motor winding failures. The surge arrestors are not suitable for discharging direct lightning strikes

part no.
155 440 902

Star plug for 6" encapsulated motors

For specific applications it is necessary to permanently run a star-delta submersible motor in star connection. This may be achieved by using the permanent star plug. This connector short-circuits all three pins in one of the two motor sockets and is designed to replace one lead.

Material	part no.
304SS	308 065 901
316SS	308 065 951

Flow Switch

- The flow switch utilizes the force of liquid flow to propel its paddle and to detect the incoming flow or movement of the existing liquid in the pipe.
- Required part for some High Efficiency Solar Systems
- For flow rates above 4 m^3/h
- connection: G1"

part no.
226 019 101

Inline Flow Switch

- The Inline Flow Switch operates magnetically. The piston within the switch body should be a free fit and spring back to its off position as soon as flow stops.
- For flow rates above 4 m^3/h
- connection: G1"

part no.
226 014 101

Level Switch

- A float switch is a device used to detect the level of liquid within a tank.
- Required part for some High Efficiency Solar Systems

part no.
308 170 209

SubDrive Pressure Switch

- The pressure switch continuously monitors the pressure in the water supply system and feeds the information to the SubDrive controller.
- The factory setting of the desired pressure is 3.4 bar (can be changed).

part no.
223 995 901